OSRAM LZ4-20MC08

Datasheet

Published by ams-OSRAM AG
Tobelbader Strasse 30, 8141 Premstaetten, Austria
Phone +43 3136 500-0
ams-osram.com
© All rights reserved

OSRAM

LED ENGIN LuxiGen

LZ4-20MC08

LZ4 Emitter on 4-Channel Star MCPCB
For emitter specification, please refer to the emitter datasheet LZ4-00MC08.

Features

- Thermal Resistance: 1.1 K/W (only MCPCB without emitter)
- Diameter of MCPCB: 19.9 mm

Ordering Information

Type	Brightness [1)]	Ordering Code
LZ4-20MC08-0000		Q65113A2986
● red	● Φ_V = 105 ... 160 lm (I_F = 700 mA)	
● true green	● Φ_V = 250 ... 390 lm (I_F = 700 mA)	
● blue	● Φ_V = 30 ... 74 lm (I_F = 700 mA)	

Note that binning is only performed on emitter level, and the binning of the emitter on MCPCB products follows the emitter binning.

Dimensional Drawing [2)]

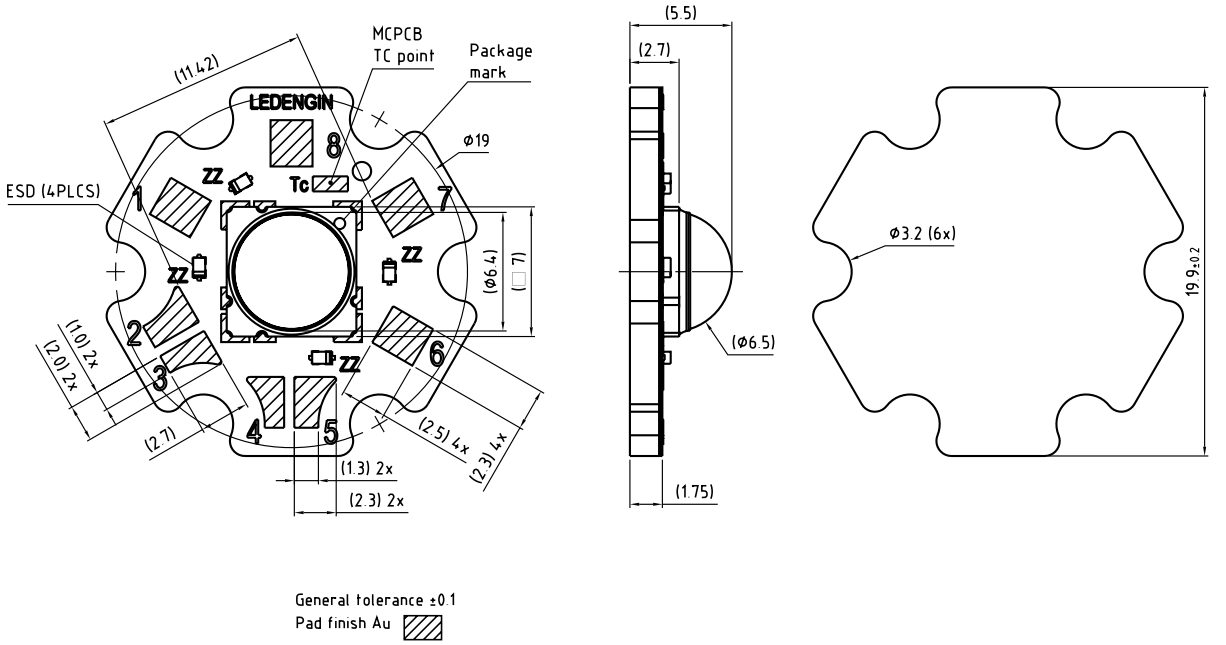

Further Information:

Approximate Weight: 1,662.5 mg

Electrical Internal Circuit

Pin Out			
Ch.	MCPCB Pad	Function	Die
1	1	Anode(+)	A
	8	Cathode(-)	
2	3	Anode(+)	D
	2	Cathode(-)	
3	5	Anode(+)	C
	4	Cathode(-)	
4	7	Anode(+)	B
	6	Cathode(-)	

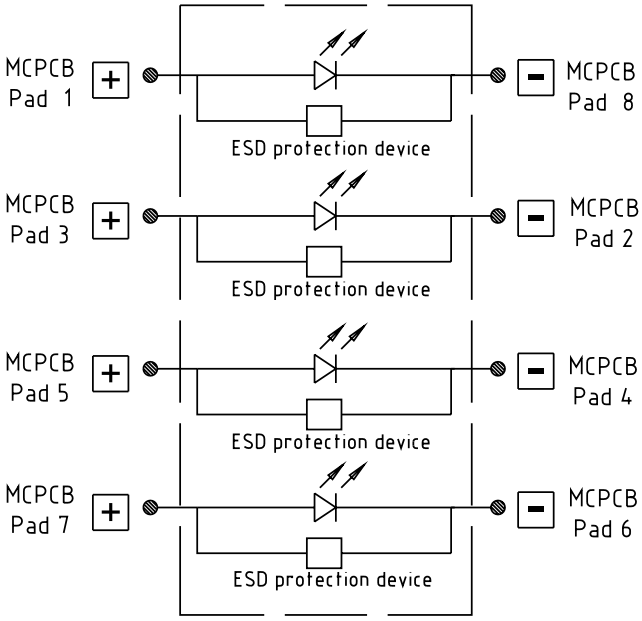

Application Guidelines

MCPCB Assembly Recommendations

The following diagrams describe the recommended mounting structure:

- Thermal interface material between MCPCB and Heat Sink
- Plastic washers between M3 or #4-40 screw heads and MCPCB.

Please note that the following diagrams use one of our MCPCB product as a general depiction of the mounting structure. Refer to “Dimensional Drawing” section in this datasheet for the exact form factor of the product in this datasheet.

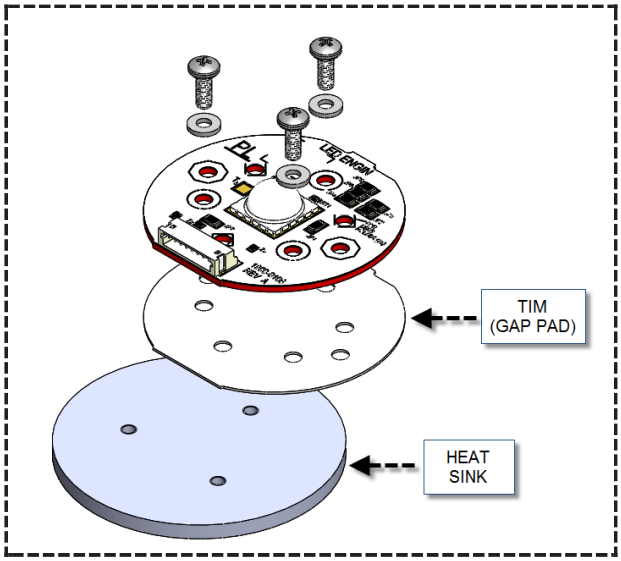

Mounting structure (exploded view)

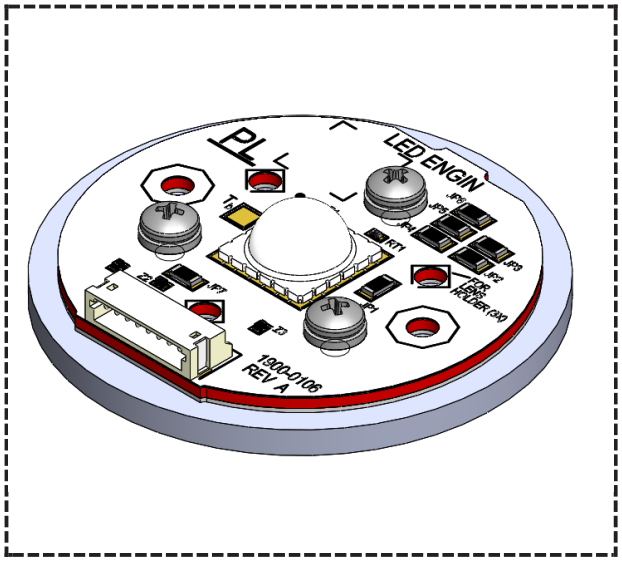

Mounting structure (normal view)

Thermal interface material

A good thermal design requires an efficient heat transfer from the MCPCB to the heat sink. In order to minimize air gaps in between the MCPCB and the heat sink, it is common practice to use thermal interface materials such as thermal pastes, thermal pads, phase change materials and thermal epoxies. Each material has its pros and cons depending on the design. Thermal interface materials are most efficient when the mating surfaces of the MCPCB and the heat sink are flat and smooth. Rough and uneven surfaces may cause gaps with higher thermal resistances, increasing the overall thermal resistance of this interface. It is critical that the thermal resistance of the interface is low, allowing for an efficient heat transfer to the heat sink and keeping MCPCB temperatures low.

Thermal interface material recommendations:

Bergquist's Gap Pad 5000S35, 0.020 in thick

- Part Number: Gap Pad® 5000S35, 0.020 in / 0.508 mm
- Thickness: 0.508 mm (0.020 in).
- Thermal conductivity: 5 W / (m·K)
- Continuous use max temperature: 200 °C

3M's Acrylic Interface Pad 0.508 mm (0.020 in).

- Part number: 5590H @ 0.5 mm
- Thickness: 0.508 mm (0.020 in).
- Thermal conductivity: 3 W / (m·K)
- Continuous use max temperature: 100 °C

Plastic washers

When optimizing the thermal performance, attention must also be paid to the amount of stress that is applied on the MCPCB. Too much stress can cause the ceramic emitter to crack. To prevent this, it is advisable to use plastic washers between the screw head and the MCPCB and to follow the torque range listed on the next page.

Plastic washers recommendations:

- For applications where heat sink temperature is 75 - 100 °C, it is recommended to use high temperature and rigid plastic washers, such as polycarbonate washers.
- For applications where heat sink temperature is less than 75 °C, nylon washers are acceptable.

Mechanical Mounting Considerations

The mounting of MCPCB assembly is a critical process step. Excessive mechanical stress build up in the MCPCB can cause the MCPCB to warp which can lead to emitter substrate cracking and subsequent cracking of the LED dies.

The following steps are recommended to avoid mechanical stress build up in the MCPCB:

- Inspect bottom surface of MCPCB and top surface of heat sink for flatness and smoothness. General flatness spec is 0.10 mm per 25 mm (0.004” per in) or better.
- Always use M3 or #4-40 machine screws with M3 or #4 plastic washers. Use screws with flat bottom such as pan head, socket head and rounded head. Do not use screws with conical bottom, such as flat head screws.
- For Star MCPCBs, only 3 sets of screws evenly spaced around the board are required and only 3 sets should be used (do not use more than 3 screws). For 50 mm boards (LZ7-Axxxxx, LZP-Wxxxxx), use 3 screws in LED Engin standard screw holes or 2 screws in Zhaga compatible screw holes (please refer to the mechanical drawing of respective product for exact location).
- Always use plastic washers in combinations with the screws. This avoids high point contact stress on the screw head to MCPCB interface, in case the screw is not seated perpendicular.
- When fastening the screws, it is recommended to tighten the screws in multiple small steps. This method minimizes the chance of introducing unwanted MCPCB bending or tilting during mounting process. The recommended torque range is 0.14 – 0.18 Nm (20 – 25 oz·in) for LZP-Dxxxxx and LZP-Wxxxxx; 0.21 – 0.25 Nm (30 – 35 oz·in) for all other LED Engin MCPCB products.

Wire Soldering

- To ease the process of soldering wire to MCPCB, it is advised to preheat the MCPCB on a hot plate of 125-150 °C. Subsequently, apply the solder and additional heat from the solder iron will initiate a good solder reflow. It is recommended to use a soldering iron of more than 60 W.
- It is advised to use lead-free, no-clean solder. For example: SN-96.5 AG-3.0 CU 0.5 #58/275 from Kester (pn: 24-7068-7601)

Tray [2)]

80 pieces per packing unit

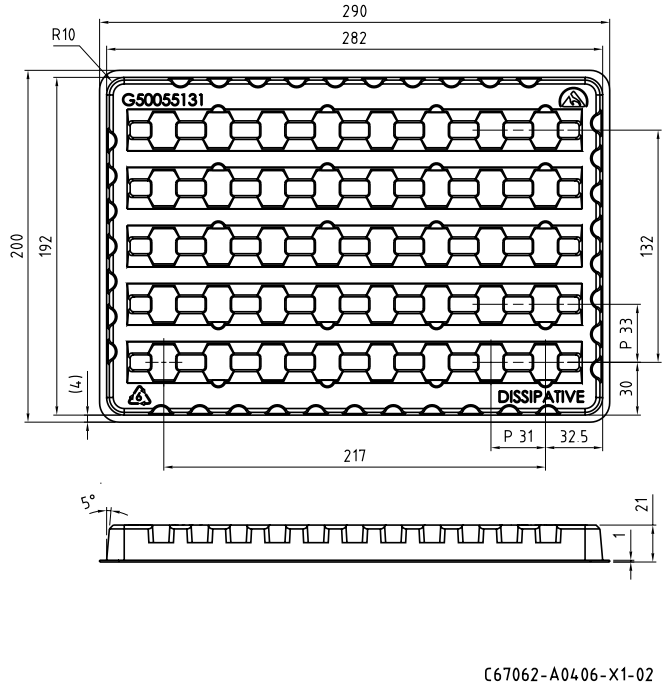

Barcode-Product-Label (BPL)

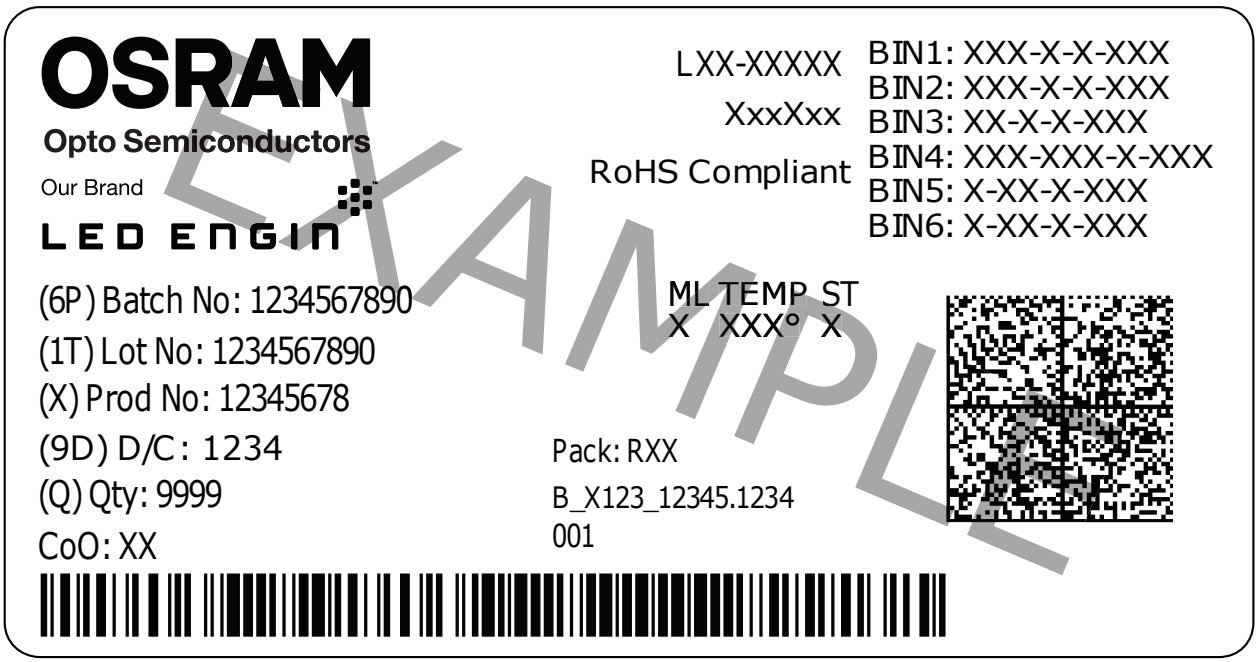

Schematic Transportation Box [2)]

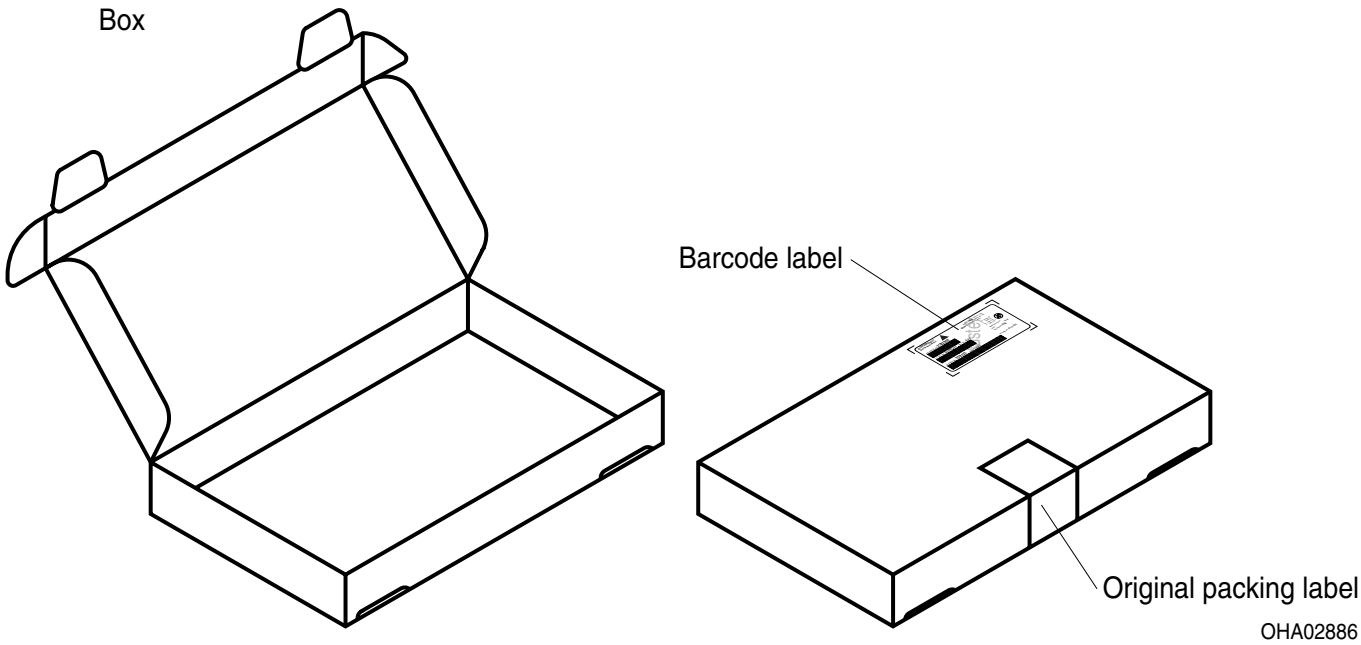

Dimensions of Transportation Box

Width	Length	Height
356 ± 5 mm	206 ±5 mm	54 ±5 mm

Notes

The evaluation of eye safety occurs according to the standard IEC 62471:2006 (photo biological safety of lamps and lamp systems). Within the risk grouping system of this IEC standard, the device specified in this data sheet fall into the class moderate risk (exposure time 0.25 s). Under real circumstances (for exposure time, conditions of the eye pupils, observation distance), it is assumed that no endangerment to the eye exists from these devices. As a matter of principle, however, it should be mentioned that intense light sources have a high secondary exposure potential due to their blinding effect. When looking at bright light sources (e.g. headlights), temporary reduction in visual acuity and afterimages can occur, leading to irritation, annoyance, visual impairment, and even accidents, depending on the situation.

Subcomponents of this device contain, in addition to other substances, metal filled materials including silver. Metal filled materials can be affected by environments that contain traces of aggressive substances. Therefore, we recommend that customers minimize device exposure to aggressive substances during storage, production, and use. Devices that showed visible discoloration when tested using the described tests above did show no performance deviations within failure limits during the stated test duration. Respective failure limits are described in the IEC60810.

Changes to the content of this datasheet may occur without further notification. JEDEC 46C constitutes the guideline of the change management for the device specified in this document.

For further application related information please visit www.osram-os.com/appnotes

Disclaimer

Attention please!

The information describes the type of component and shall not be considered as assured characteristics. Terms of delivery and rights to change design reserved. Due to technical requirements components may contain dangerous substances.
For information on the types in question please contact our Sales Organization.
If printed or downloaded, please find the latest version on our website.

Packing

Please use the recycling operators known to you. We can also help you – get in touch with your nearest sales office. By agreement we will take packing material back, if it is sorted. You must bear the costs of transport. For packing material that is returned to us unsorted or which we are not obliged to accept, we shall have to invoice you for any costs incurred.

Product and functional safety devices/applications or medical devices/applications

Our components are not developed, constructed or tested for the application as safety relevant component or for the application in medical devices.
Our products are not qualified at module and system level for such application.

In case buyer – or customer supplied by buyer – considers using our components in product safety devices/ applications or medical devices/applications, buyer and/or customer has to inform our local sales partner immediately and we and buyer and /or customer will analyze and coordinate the customer-specific request between us and buyer and/or customer.

Glossary

1) **Brightness:** Brightness groups are tested at a current pulse duration of 10 ms and a tolerance of ±10 %.

2) **Tolerance of Measure:** Unless otherwise noted in drawing, tolerances are specified with ±0.1 and dimensions are specified in mm.

Revision History

Version	Date	Change
1.1	2021-10-08	New Layout
1.2	2022-05-19	New Layout

EU RoHS and China RoHS compliant product
此产品符合欧盟 RoHS 指令的要求；
按照中国的相关法规和标准，
不含有毒有害物质或元素。

Published by ams-OSRAM AG
Tobelbader Strasse 30, 8141 Premstaetten, Austria
Phone +43 3136 500-0
ams-osram.com
© All rights reserved