Product Document

Published by
ams OSRAM Group

Application Note

AN001012

USB Interface & Programming Box

Evaluation Programmer for SPI & I²C Interface

v1-08 • 2021-Feb-05

Content Guide

1 Introduction 3

2 Hardware 4

2.1 Kit Content 4
2.2 Compatible Products 5
2.3 Pin-Out 6

3 First Steps with the USB I&P Box 7

4 Connecting Adapter Board to USB I&P Box 8

4.1 AS5013 8
4.2 AS5047D/AS5147/AS5047P/AS5147P 9
4.3 AS5050A/AS5055A 10
4.4 AS5048A/AS5048B 11
4.5 AS5100 12
4.6 AS5116 13
4.7 AS5510 14
4.8 AS5600 15
4.9 AS5600L (for WLCSP-15 and SOIC-8 package) 16
4.10 AS5601 17
4.11 AS5200A/L 18
4.12 AS5247 20
4.13 AS5047U/AS5147U 21
4.14 AS5247U 22
4.15 AS8579 23

5 Software 24

5.1 GUI Overview 24
5.2 Firmware Update 25

6 Revision Information 26

7 Legal Information 27

1 Introduction

This Manual explains how to use the USB I&P Box.

The USB I&P Box is a Programming-Tool for Magnetic Position Sensors with I^2C or SPI Interface. After connecting a Magnetic Position Sensor to I&P Box you can open the GUI on your computer and start programming.

For programming a Magnetic Position Sensor, the sensor should be mounted on a PCB to get connected with all the necessary pins of the sensor.

For Position Sensors, **ams** provides Adapter boards where an easy access from the Sensor to the USB I&P Box is possible (not in the Tool-Kit included)

Figure 1:
USB I&P Box

2 Hardware

2.1 Kit Content

Figure 2:
Kit Content

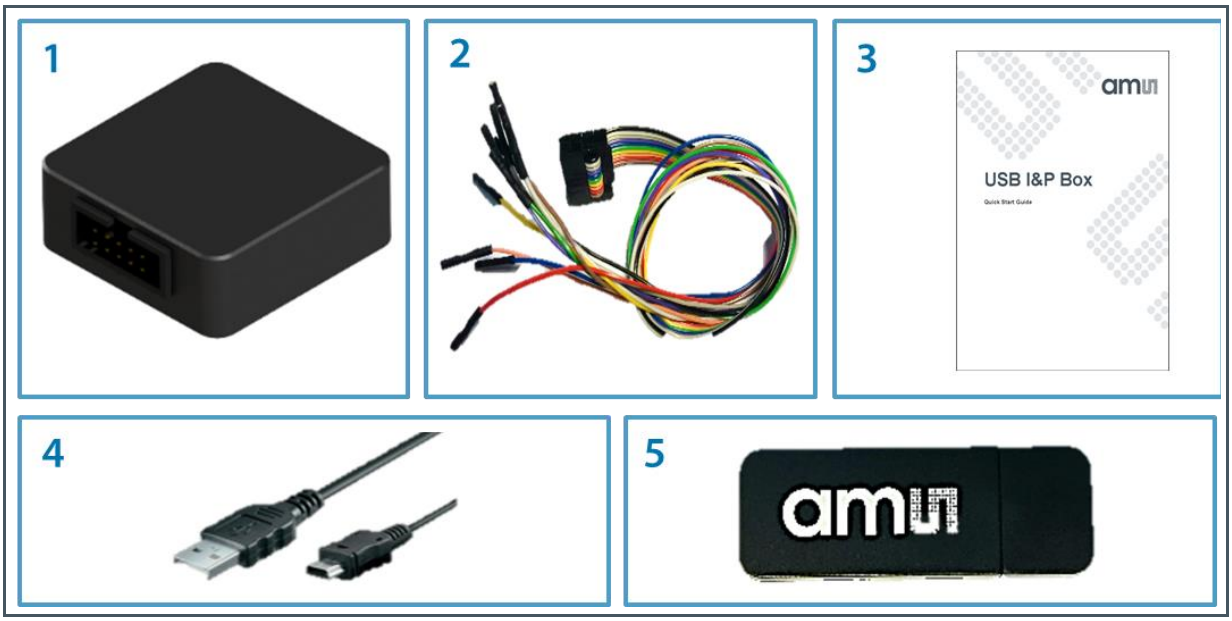

Figure 3:
USB I&P Box Kit Content

No	Part	Description
1	USB I&P Box	USB Interface & Programming Box
2	10-way cable	To connect the USB I&P Box to a compatible sensor on an existing board
3	Quick Start Guide	First steps introduction
4	USB cable	To connect the USB I&P box to a computer
5	USB flash drive	Contains the USB I&P Box Software and manuals. To get latest SW / FW and Manuals please refer to https://ams.com/usbi-pbox

2.2 Compatible Products

Figure 4:
Related Products

Product	Description	Adapterboard Available
AS5013	Low Power Integrated Hall IC for Human Interface Applications	yes
AS5047D	14-bit On-Axis Magnetic Rotary Position Sensor	yes
AS5047P	14-bit On-Axis Magnetic Rotary Position Sensor	yes
AS5048A	14-bit Angular Position Sensor with SPI Interface	yes
AS5048B	14-bit Angular Position Sensor with I²C Interface	yes
AS5050A	Low Power 10-bit Magnetic Position Sensor	yes
AS5055A	Low Power 12-bit Magnetic Position Sensor	yes
AS5100	12-bit Magnetic position sensor for embedded applications	yes
AS5116	On-Axis Magnetic Position Sensor with Sin/Cos Outputs	yes
AS5147	14-bit On-Axis Magnetic Rotary Position Sensor	yes
AS5147P	14-bit On-Axis Magnetic Rotary Position Sensor	yes
AS5200	12-bit-Dual-Die Programmable Contactless Potentiometer	yes
AS5247	14-bit Dual-Die Magnetic Rotary Position Sensor	yes
AS5510	Linear Hall Sensor with I²C Output	yes
AS5600	12-bit Programmable Contactless Potentiometer	yes
AS5600L	12-bit Smallest on axis magnetic position sensor	yes
AS5601	12-bit Programmable Contactless Encoder	yes
AS5047U	14-bit On-Axis Magnetic Rotary Position Sensor	yes
AS5147U	14-bit On-Axis Magnetic Rotary Position Sensor	yes
AS5247U	14-bit On-Axis Magnetic Rotary Position Sensor	yes
AS8579	Capacitive Sensor with accu. 14-bit I&Q value	yes

2.3 Pin-Out

Figure 5:
USB I&P Box Pin-Out and Wire Description[1]

Pin #	Color	Definition	SPI Mode
1	Brown	5V Supply[1]	Not used [1]
2	Red	3.3V Supply	Positive power supply
3	Orange	SPI-CS(0)	SPI-CS(0)
4	Yellow	I2C-SCL	Not used
5	Green	SPI-CLK	SPI-CLK
6	Blue	I2C-SDA	Not used
7	Purple	SPI-MOSI	SPI-MOSI
8	Grey	SPI-CS(1)	Optional (dual die version)
9	White	SPI-MISO	SPI-MISO
10	Black	GND	GND

(1) The interface voltage of the USB I&P Box is 3.3 V. Use the 3.3 V mode when connecting to a position sensor board

3 First Steps with the USB I&P Box

The first steps to get started with the USB I&P Box are described below in Figure 6.

Figure 6:
First Steps with the USB I&P Box

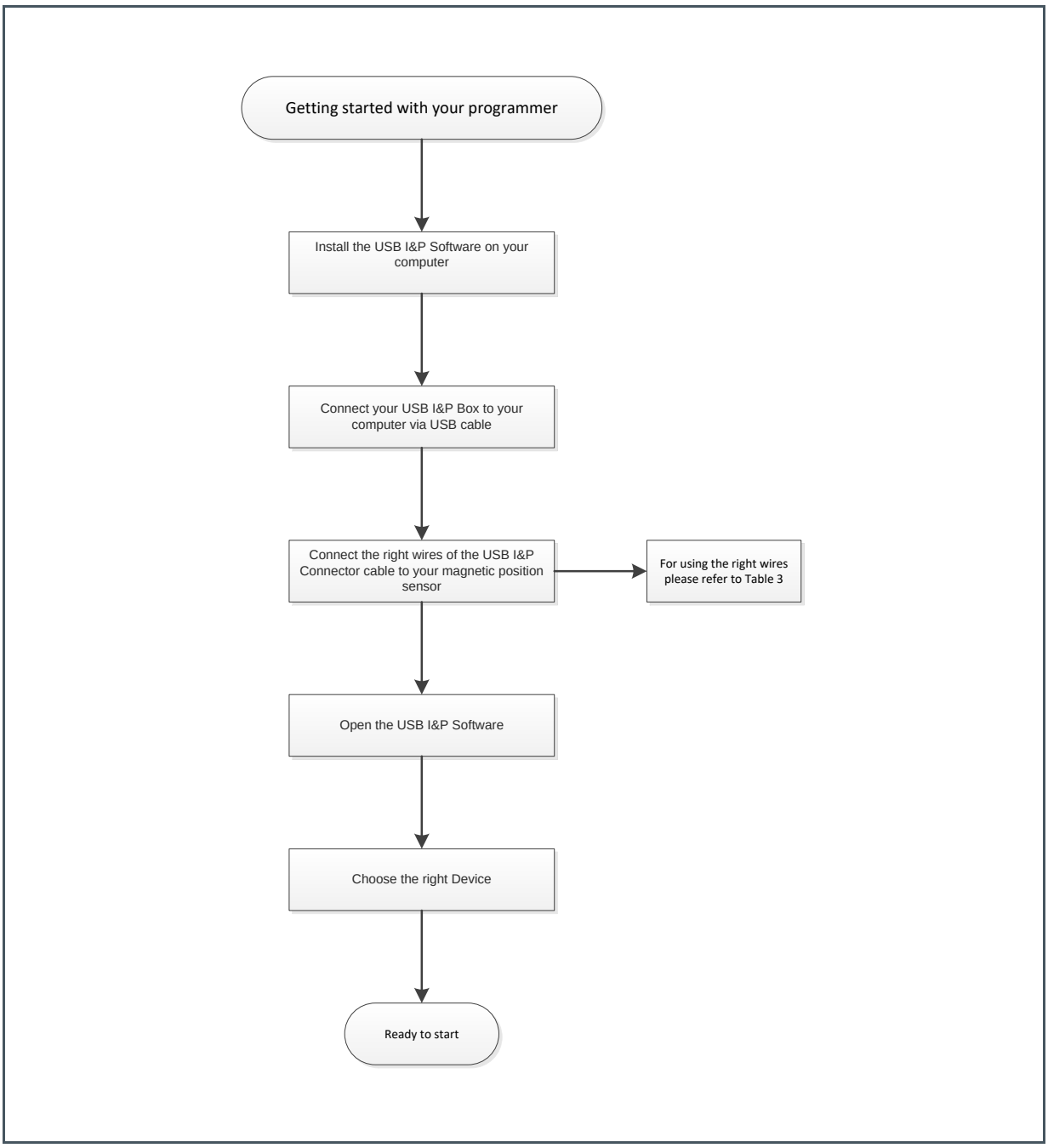

4 Connecting Adapter Board to USB I&P Box

4.1 AS5013

Figure 7:
How to Connect Adapter Board to the USB I&P Box

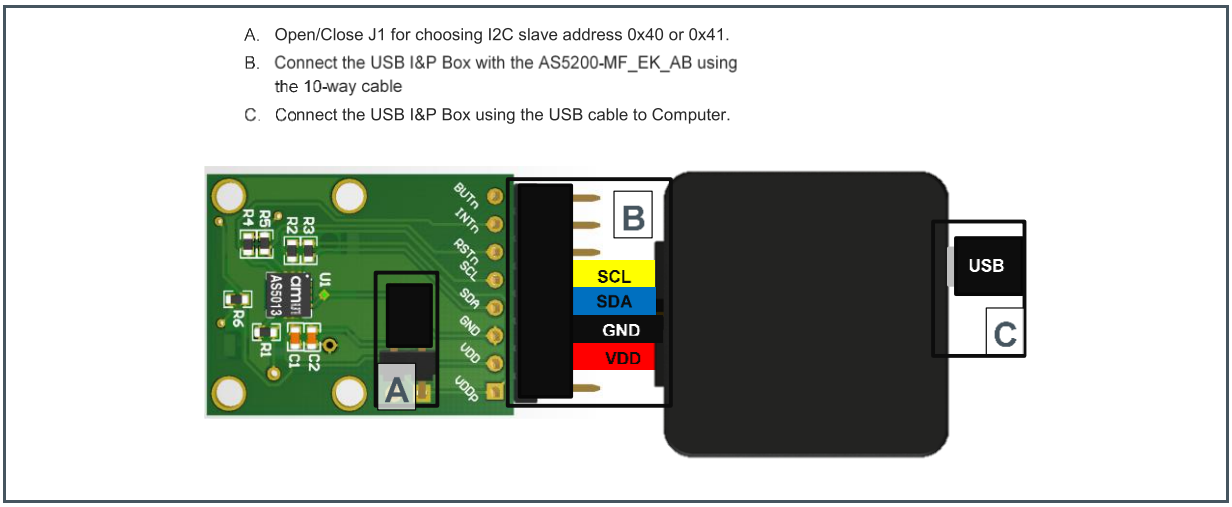

4.2 AS5047D/AS5147/AS5047P/AS5147P

Figure 8:
How to Connect Adapter Board to the USB I&P Box

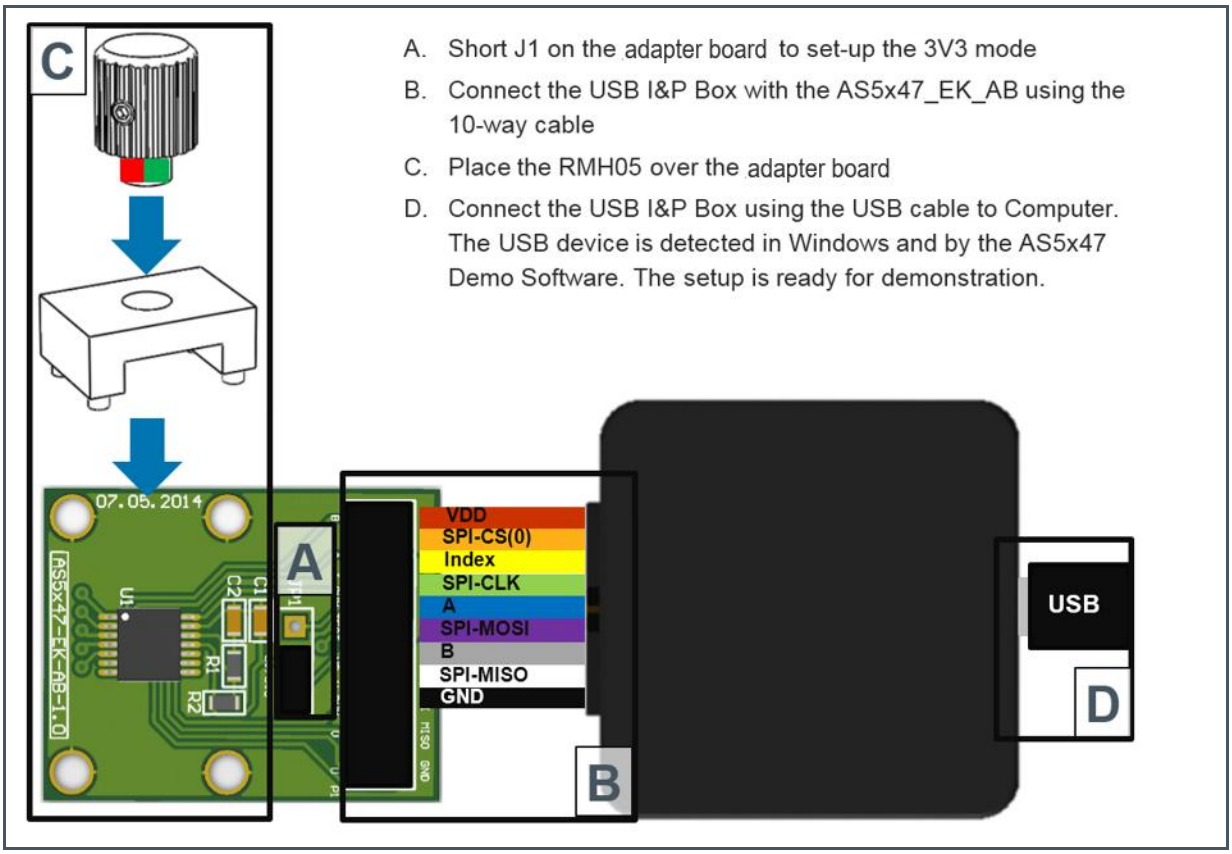

4.3 AS5050A/AS5055A

Figure 9:
How to Connect Adapter Board to the USB I&P Box

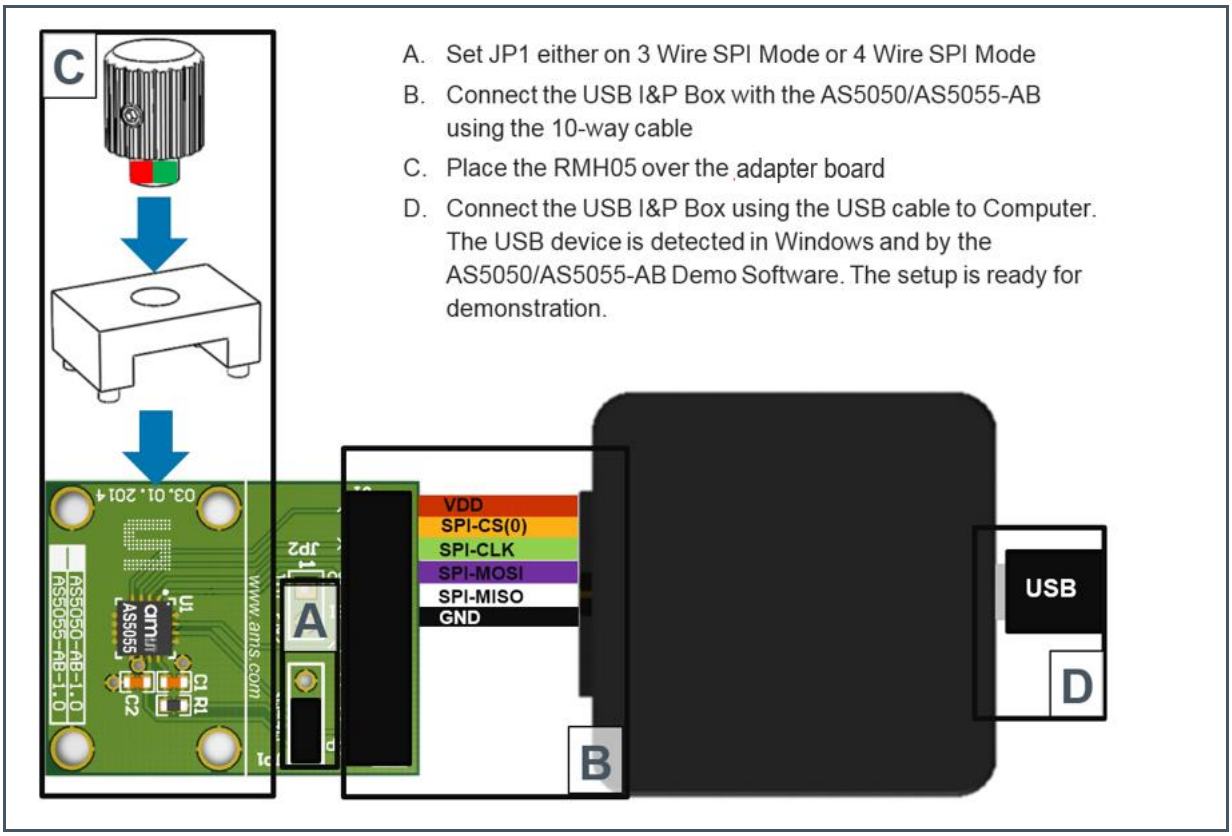

4.4 AS5048A/AS5048B

Figure 10:
How to Connect Adapter Board to the USB I&P Box

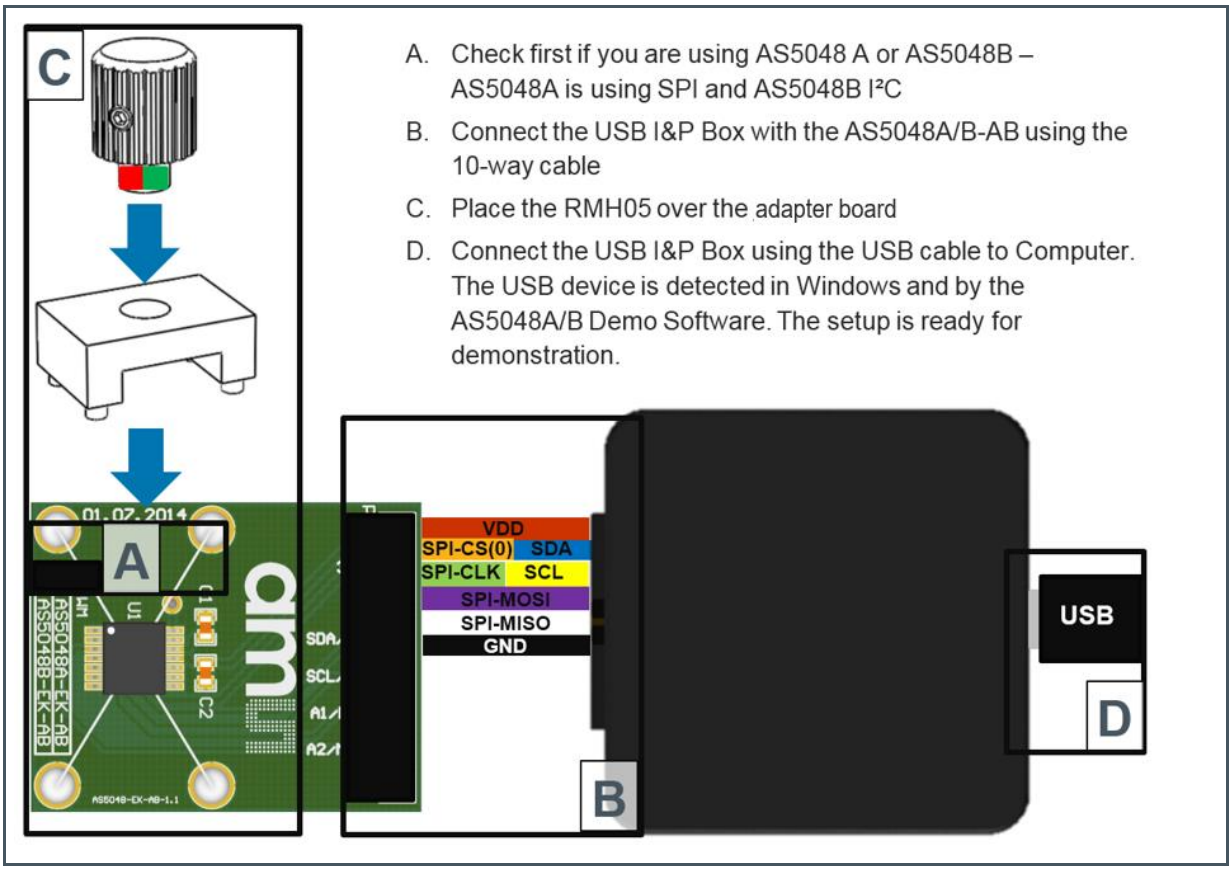

4.5 AS5100

Figure 11:
How to Connect Adapter Board to the USB I&P Box

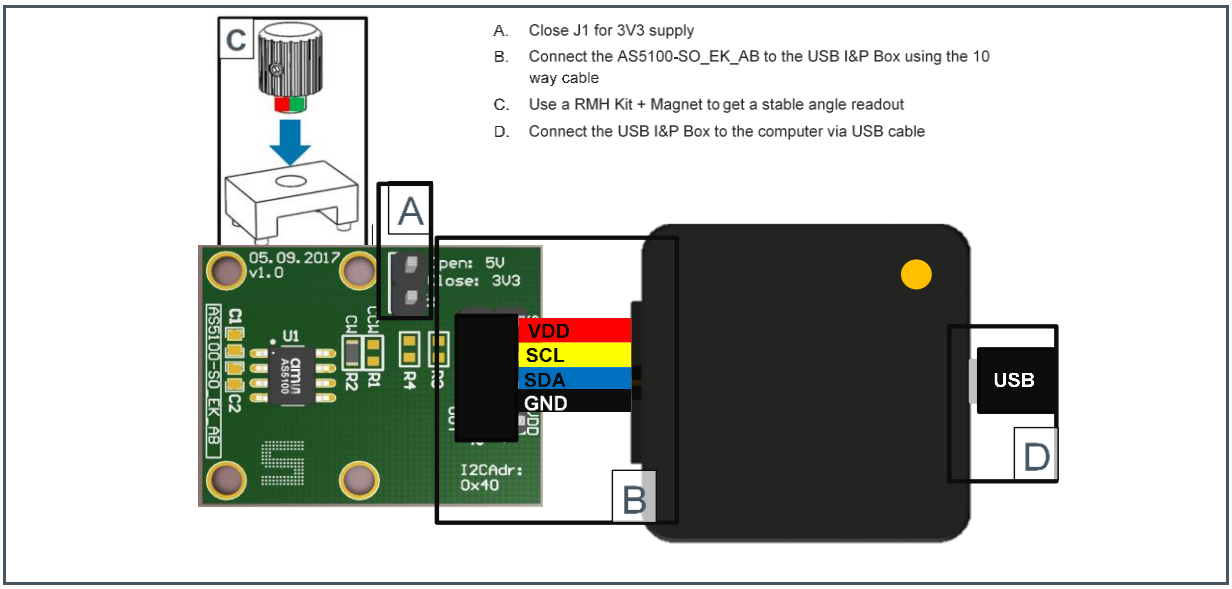

4.6 AS5116

Figure 12:
How to Connect Adapter Board to the USB I&P Box

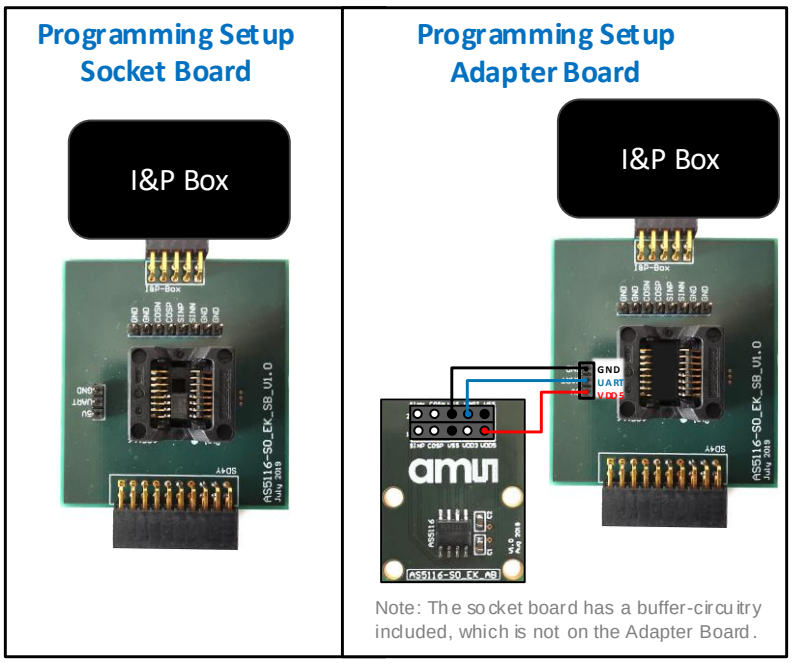

Socket board could be connected directly to the I&P Box. To program an Adapter Board, use an empty Socket Board and pass through power supply lines and UART.

4.7 AS5510

Figure 13:
How to Connect Adapter Board to the USB I&P Box

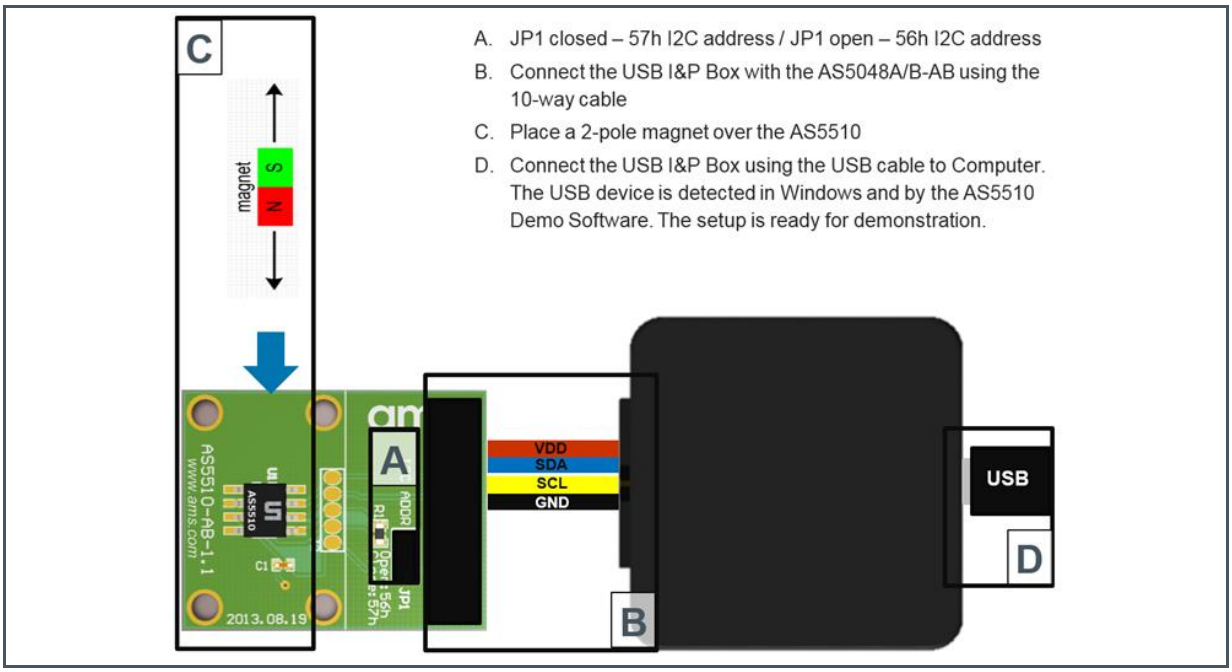

4.8 AS5600

Figure 14:
How to Connect Adapter Board to the USB I&P Box

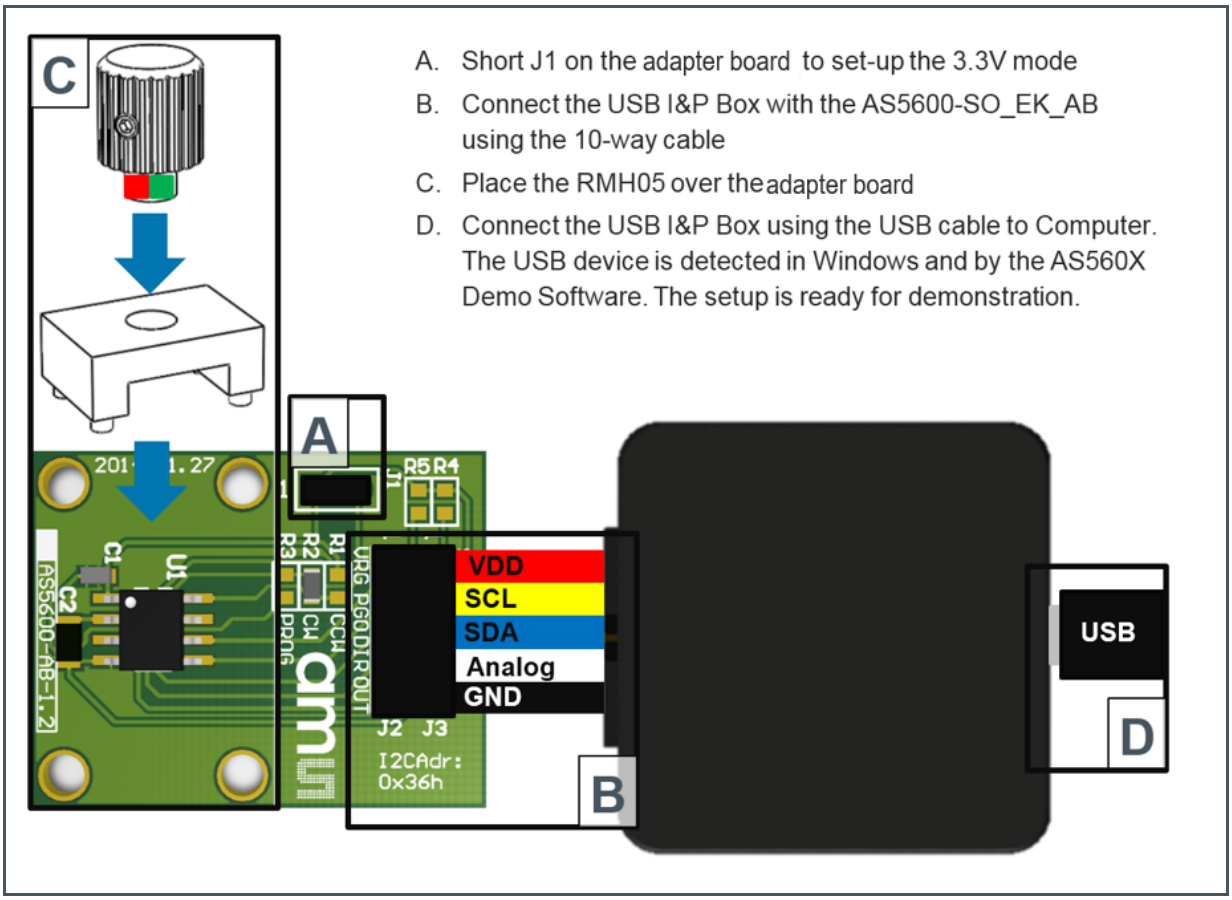

4.9 AS5600L (for WLCSP-15 and SOIC-8 package)

Figure 15:
How to Connect Adapter Board to the USB I&P Box

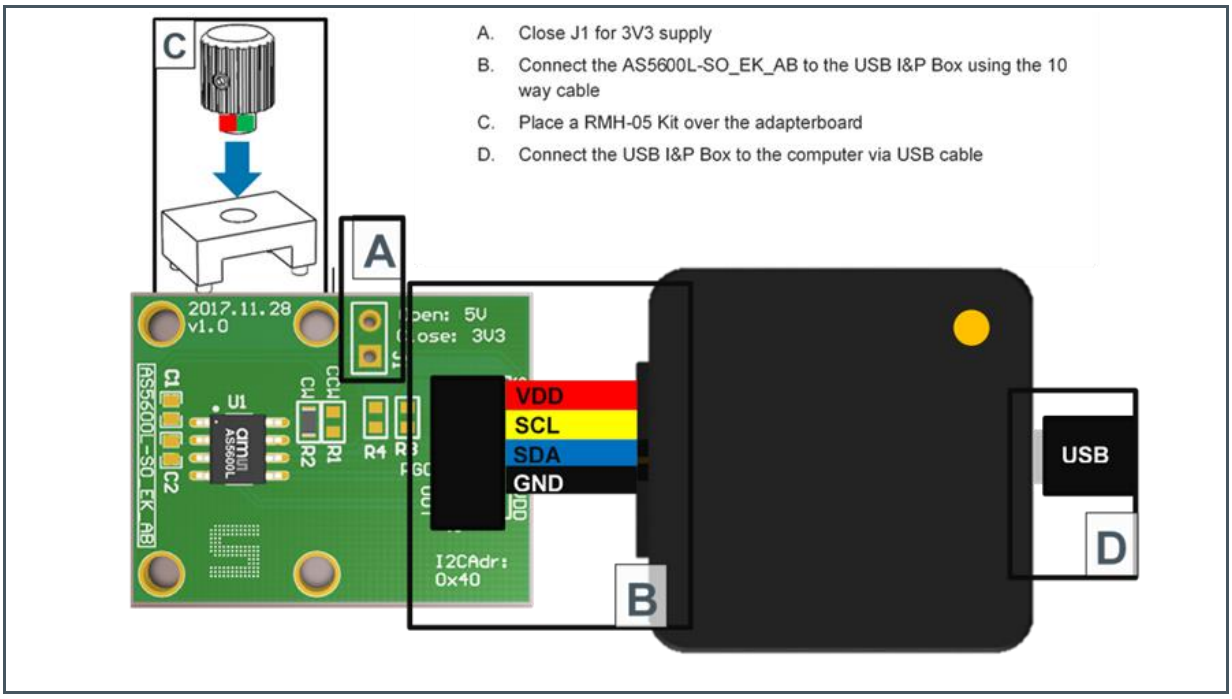

4.10 AS5601

Figure 16:
How to Connect Adapter Board to the USB I&P Box

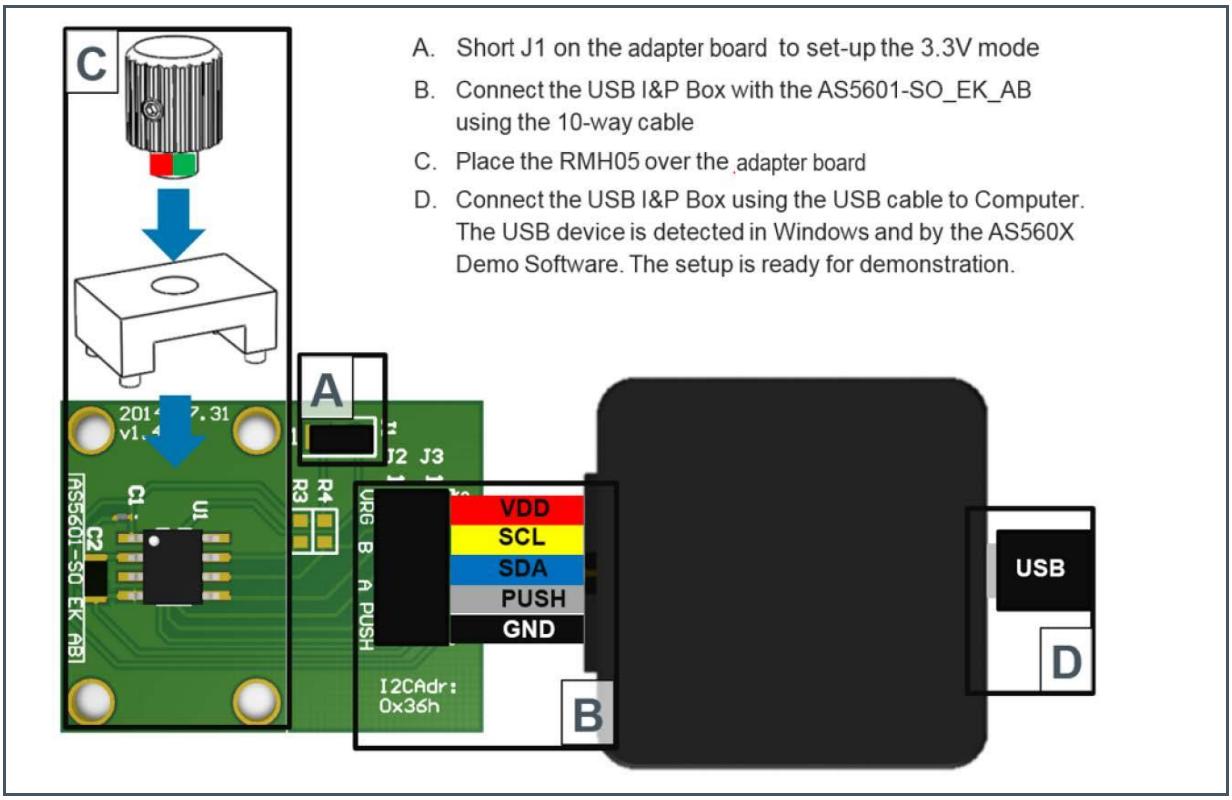

4.11 AS5200A/L

Figure 17:
How to Connect Adapter Board to the USB I&P Box

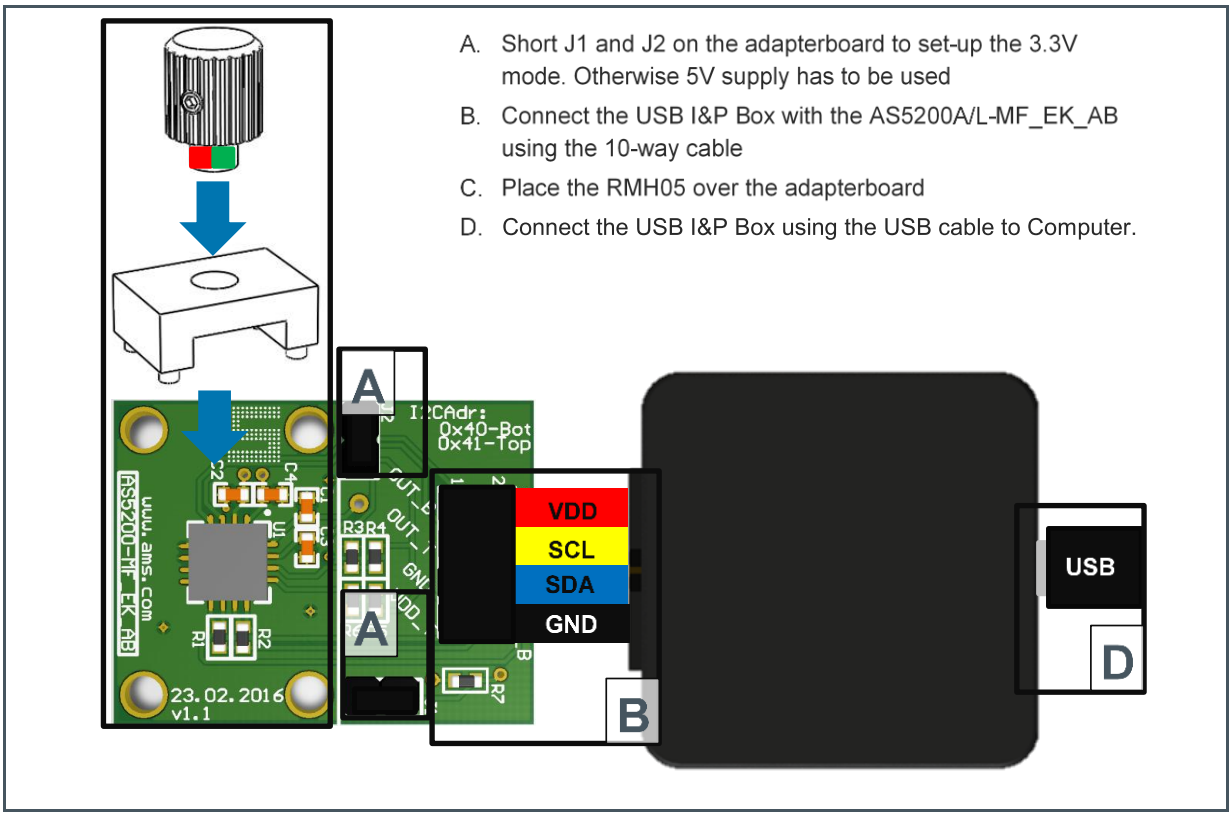

Figure 18:
How to Connect an AS5200 Adapter Board to the USB I&P Box with AS5200-USB-I&P_Adapter

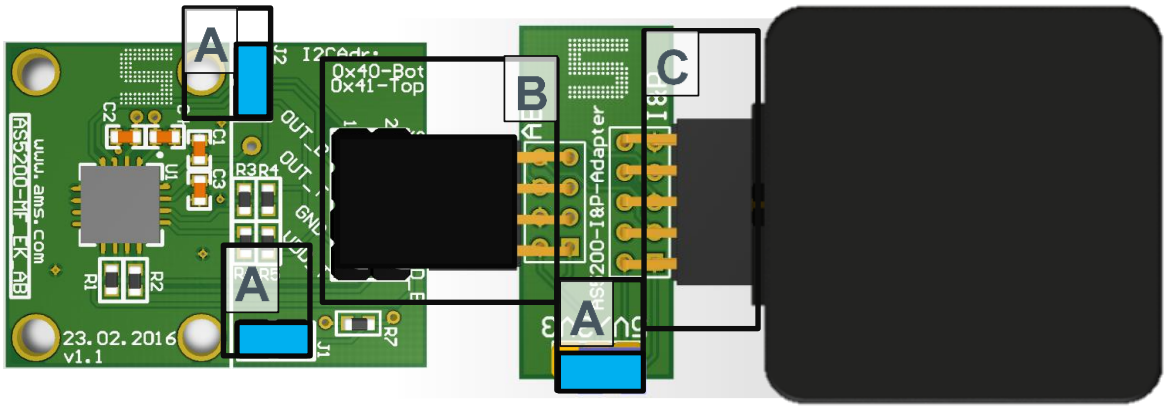

A. Set J1&J2 and the jumper on the adapter to 3V3 to use 3.3V supply.
To use 5V supply leave J1&J2 open and set 5V on the adapter pcb.
B. Connect the adapter with the AS5200-MF_EK_AB
C. Connect the adapter with the USB I&P Box

4.12 AS5247

Figure 19:
How to Connect Adapter Board to the USB I&P Box

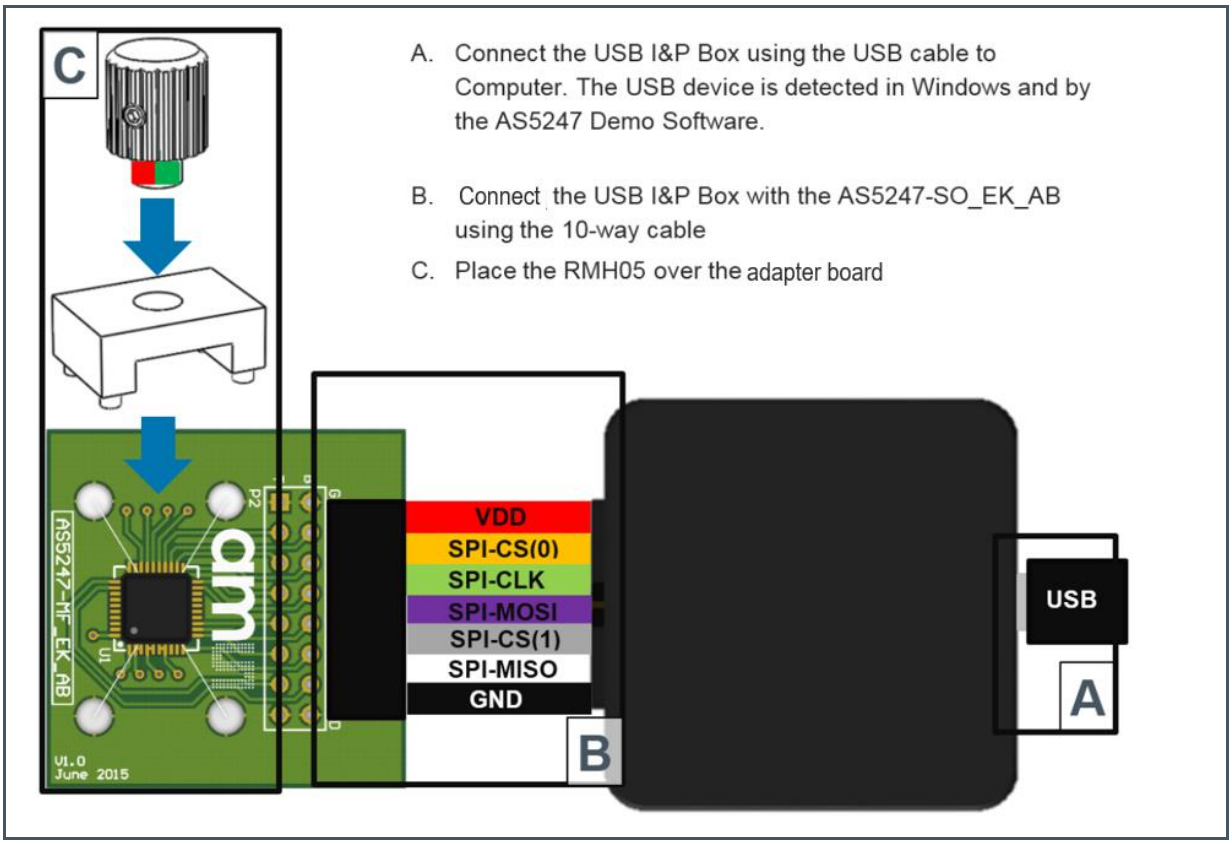

4.13 AS5047U/AS5147U

Figure 20:
How to Connect Adapter Board to the USB I&P Box

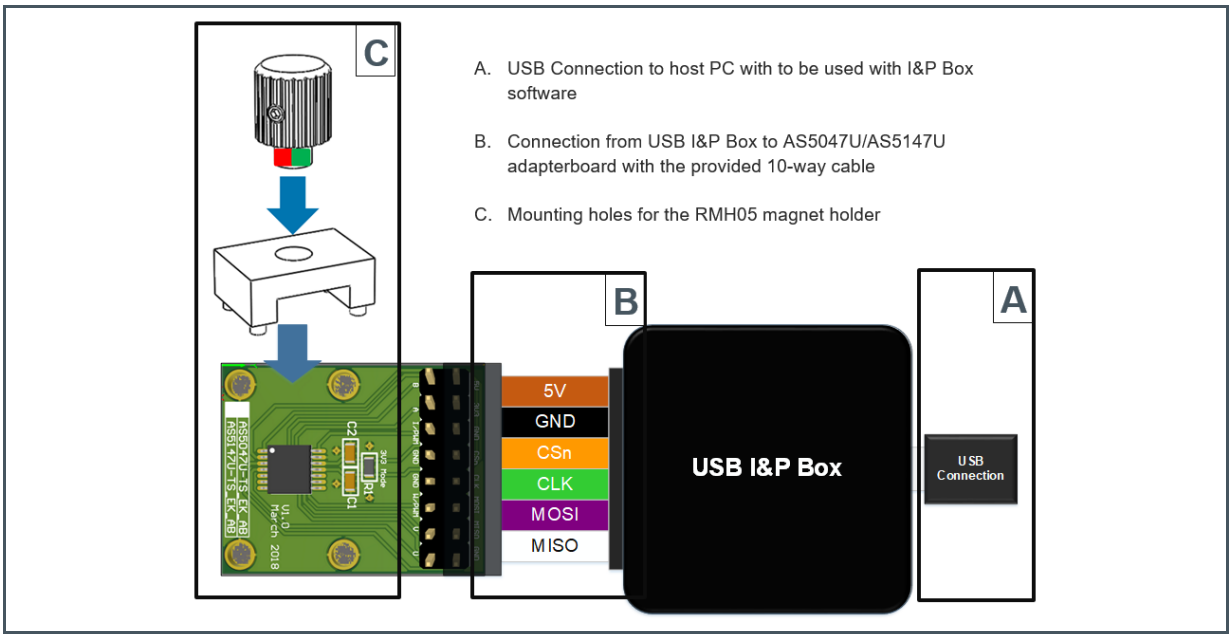

4.14 AS5247U

Figure 21:
How to Connect Adapter Board to the USB I&P Box

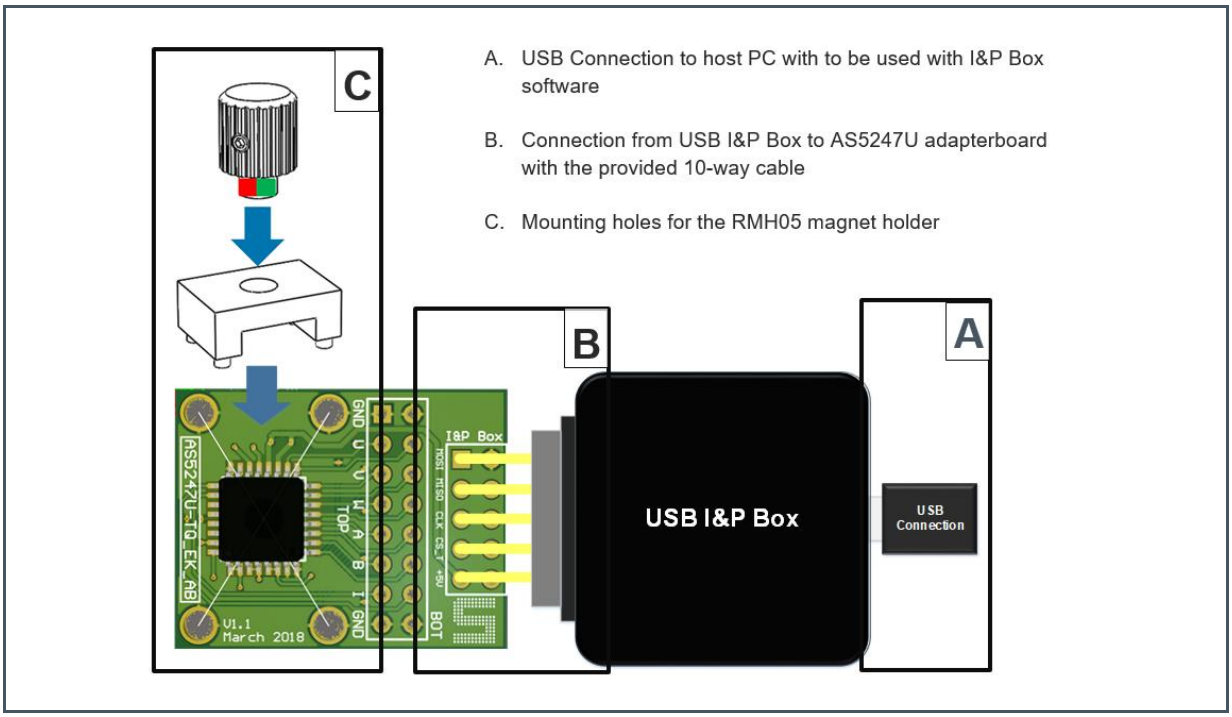

Plug the AS5247U-TQ_EK_AB directly with the populated 10-way connector to the USB I&P Box. It is possible to extend the connections with cables. Maximum wire length is 30 cm.

4.15 AS8579

Figure 22:
How to Connect AS8579 Evaluation Board to the USB I&P Box

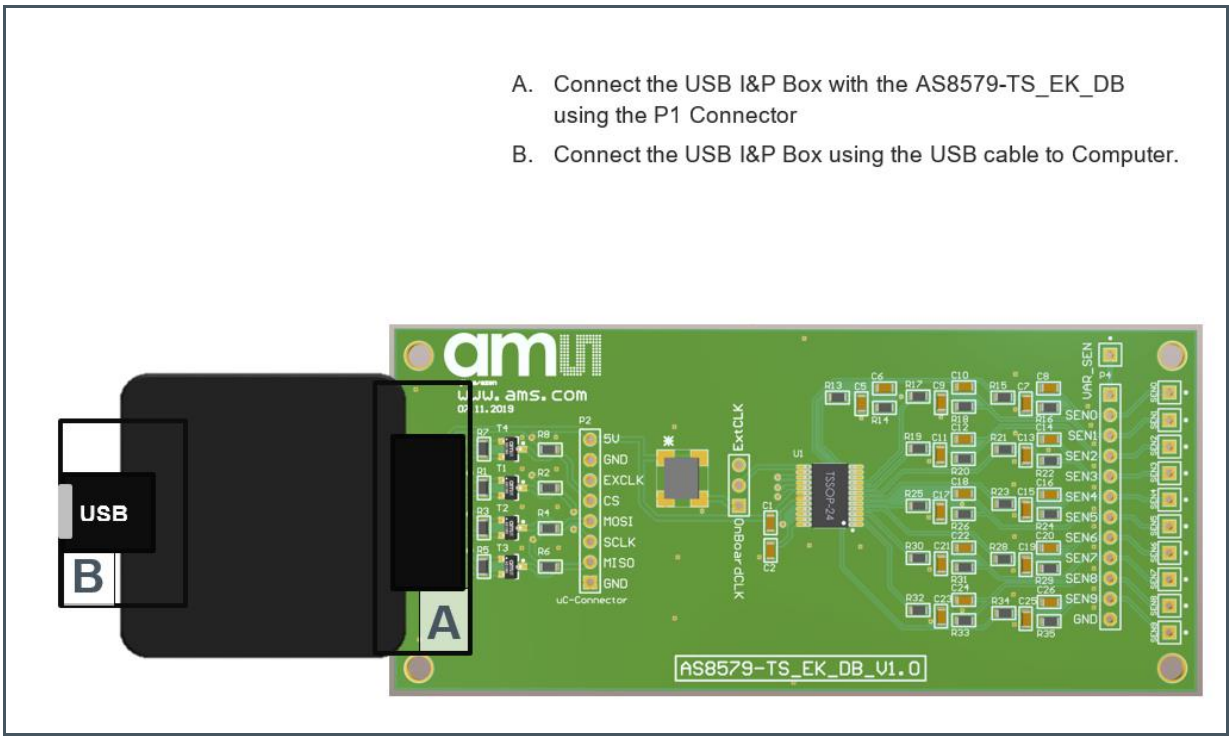

5 Software

5.1 GUI Overview

Also included in your USB I&P Tool is a USB stick with the software.

The software is needed for programming the Magnetic Position Sensor on your computer.

When you copied the software from the USB stick to your computer, please click on it and follow the instructions of the Install Wizard through the installing procedure.

The software is compatible for Windows XP and newer versions.

In Figure 23: you can have a look at the starting page after finishing the installing and no device connected.

Figure 24 shows the GUI while a Programmer Box connected

Figure 23:
Screenshot of the GUI's Starting Page While No Programmer is Connected

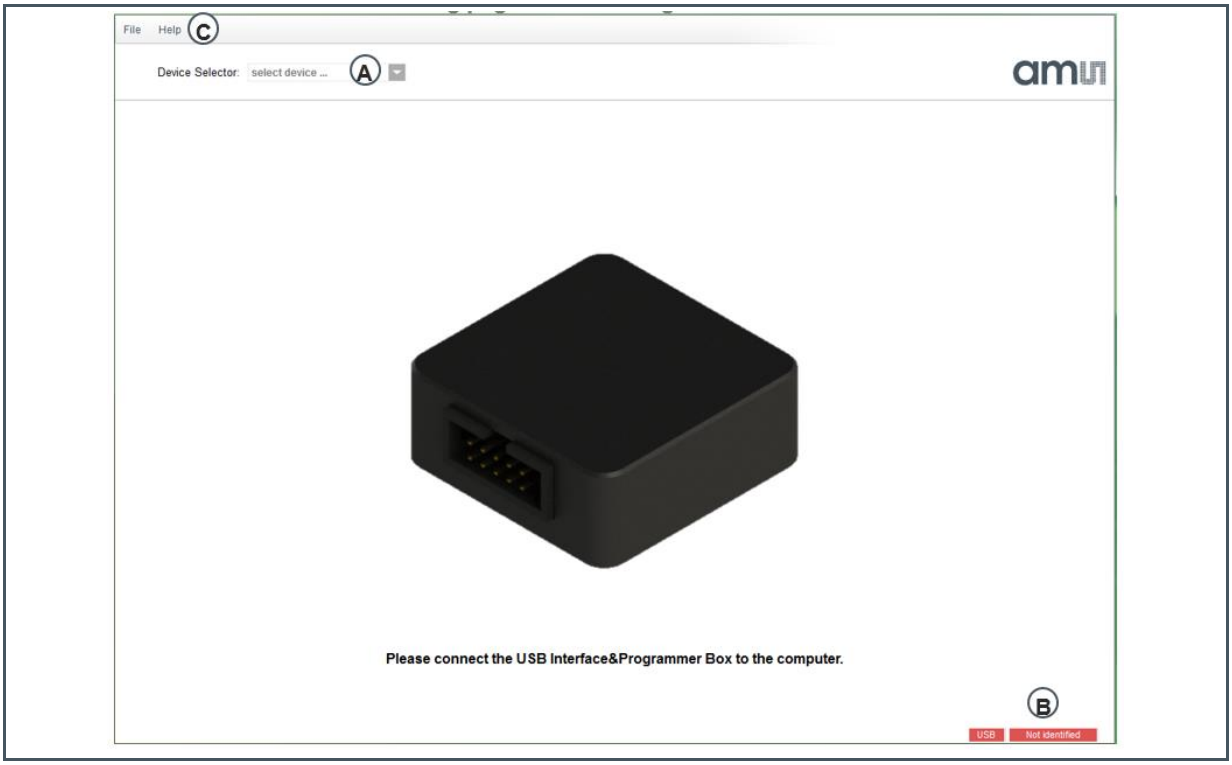

A Select the Device (only possible when a I&P Box is detected)

B Check if the Programmer will be detected (or there is no bootloader on the I&P Box)

C For firmware updates click on Help and Firmware Update, for further Information about this topic refer to Firmware Update

Figure 24:
Screenshot of the GUI's Starting Page While Programmer Connected

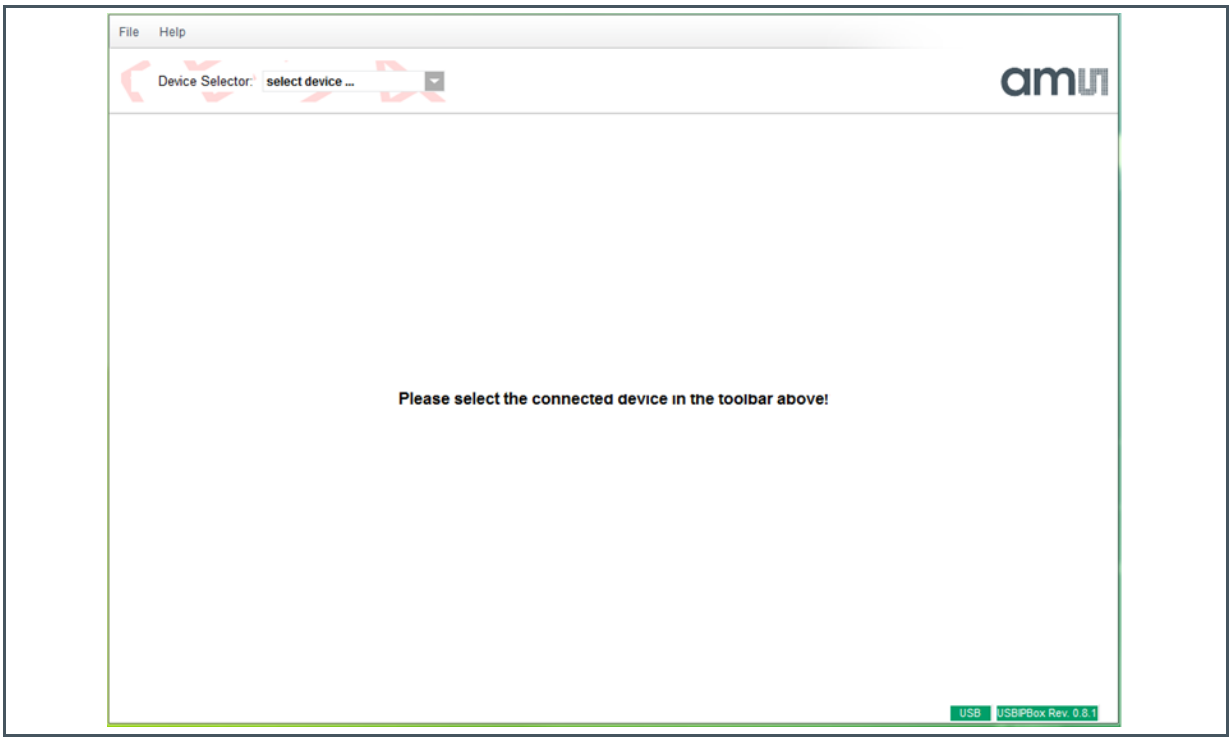

5.2 Firmware Update

- Connect your I&P Box to your Computer and open the Software
- Click on Help and Firmware Update
- Search your computer for the new firmware file and click at it
- After that the firmware installs by itself and the update is successful

6 Revision Information

Changes from previous version to current revision v1-08	Page
Added information of AS5013, AS5116 & AS8579	

- Page and figure numbers for the previous version may differ from page and figure numbers in the current revision.
- Correction of typographical errors is not explicitly mentioned.

7 Legal Information

Copyrights & Disclaimer

Copyright ams AG, Tobelbader Strasse 30, 8141 Premstaetten, Austria-Europe. Trademarks Registered. All rights reserved. The material herein may not be reproduced, adapted, merged, translated, stored, or used without the prior written consent of the copyright owner.

Information in this document is believed to be accurate and reliable. However, ams AG does not give any representations or warranties, expressed or implied, as to the accuracy or completeness of such information and shall have no liability for the consequences of use of such information.

Applications that are described herein are for illustrative purposes only. ams AG makes no representation or warranty that such applications will be appropriate for the specified use without further testing or modification. ams AG takes no responsibility for the design, operation and testing of the applications and end-products as well as assistance with the applications or end-product designs when using ams AG products. ams AG is not liable for the suitability and fit of ams AG products in applications and end-products planned.

ams AG shall not be liable to recipient or any third party for any damages, including but not limited to personal injury, property damage, loss of profits, loss of use, interruption of business or indirect, special, incidental or consequential damages, of any kind, in connection with or arising out of the furnishing, performance or use of the technical data or applications described herein. No obligation or liability to recipient or any third party shall arise or flow out of ams AG rendering of technical or other services.

ams AG reserves the right to change information in this document at any time and without notice.

RoHS Compliant & ams Green Statement

RoHS Compliant: The term RoHS compliant means that ams AG products fully comply with current RoHS directives. Our semiconductor products do not contain any chemicals for all 6 substance categories plus additional 4 substance categories (per amendment EU 2015/863), including the requirement that lead not exceed 0.1% by weight in homogeneous materials. Where designed to be soldered at high temperatures, RoHS compliant products are suitable for use in specified lead-free processes.

ams Green (RoHS compliant and no Sb/Br/Cl): ams Green defines that in addition to RoHS compliance, our products are free of Bromine (Br) and Antimony (Sb) based flame retardants (Br or Sb do not exceed 0.1% by weight in homogeneous material) and do not contain Chlorine (Cl not exceed 0.1% by weight in homogeneous material).

Important Information: The information provided in this statement represents ams AG knowledge and belief as of the date that it is provided. ams AG bases its knowledge and belief on information provided by third parties, and makes no representation or warranty as to the accuracy of such information. Efforts are underway to better integrate information from third parties. ams AG has taken and continues to take reasonable steps to provide representative and accurate information but may not have conducted destructive testing or chemical analysis on incoming materials and chemicals. ams AG and ams AG suppliers consider certain information to be proprietary, and thus CAS numbers and other limited information may not be available for release.

Headquarters
ams AG
Tobelbader Strasse 30
8141 Premstaetten
Austria, Europe
Tel: +43 (0) 3136 500 0

Please visit our website at www.ams.com
Buy our products or get free samples online at www.ams.com/Products
Technical Support is available at www.ams.com/Technical-Support
Provide feedback about this document at www.ams.com/Document-Feedback
For sales offices, distributors and representatives go to www.ams.com/Contact
For further information and requests, e-mail us at ams_sales@ams.com