LUW H9GP.CE

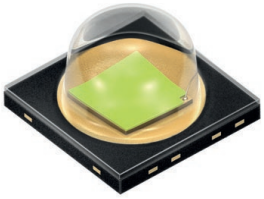

OSLON® Black

OSLON Black Series combines thermal stability with high performance and reliability in a compact black package. It has a metal lead frame and a tried and tested lens design. The LED can be used wherever there are large fluctuations in temperature and a large amount of light is needed from a small area.

Applications

- Cluster, Button Backlighting
- Custom Tuning
- Head-Up Display LED & Laser
- Interior Illumination (e.g. Ambient Map)
- Transportation, Plane, Ship

Features:

- Package: SMD epoxy package with silicone lens
- Chip technology: ThinGaN
- Typ. Radiation: 90°
- Color: Cx = 0.31, Cy = 0.32 acc. to CIE 1931 (● ultra white)
- Corrosion Robustness Class: 3B
- Qualifications: AEC-Q102 Qualified
- ESD: 8 kV acc. to ANSI/ESDA/JEDEC JS-001 (HBM, Class 3B)

Ordering Information

Type	Luminous Flux [1] I_F = 350 mA Φ_V	Ordering Code
LUW H9GP.CE-KYLY-EMKM-1	82 ... 150 lm	Q65111A1881

Maximum Ratings

Parameter	Symbol		Values
Operating Temperature	T_{op}	min. max.	-40 °C 125 °C
Storage Temperature	T_{stg}	min. max.	-40 °C 125 °C
Junction Temperature	T_j	max.	150 °C
Junction Temperature for short time applications*	T_j	max.	175 °C
Forward Current T_S = 25 °C	I_F	min. max.	100 mA 1000 mA
Surge Current t ≤ 10 µs; D = 0.016 ; T_S = 25 °C	I_{FS}	max.	2500 mA
ESD withstand voltage acc. to ANSI/ESDA/JEDEC JS-001 (HBM, Class 3B)	V_{ESD}		8 kV
Reverse current [2)]	I_R	max.	200 mA

* The median lifetime (L70/B50) for Tj = 175°C is 100h.

Characteristics

I_F = 350 mA; T_S = 25 °C

Parameter	Symbol		Values
Chromaticity Coordinate [3]	Cx Cy	typ. typ.	0.31 0.32
Viewing angle at 50% I_V	2φ	typ.	90 °
Forward Voltage [4] I_F = 350 mA	V_F	min. typ. max.	2.75 V 3.20 V 3.75 V
Reverse voltage (ESD device)	$V_{R\ ESD}$	min.	45 V
Reverse voltage [2] I_R = 20 mA	V_R	max.	1.2 V
Real thermal resistance junction/solderpoint [5]	$R_{thJS\ real}$	typ. max.	5.4 K / W 7.3 K / W

Brightness Groups

Group	Luminous Flux [1] I_F = 350 mA min. Φ_V	Luminous Flux [1] I_F = 350 mA max. Φ_V	Luminous Intensity [6] I_F = 350 mA typ. I_v
KY	82 lm	97 lm	43 cd
KZ	97 lm	112 lm	50 cd
LX	112 lm	130 lm	58 cd
LY	130 lm	150 lm	67 cd

Forward Voltage Groups

Group	Forward Voltage [4] I_F = 350 mA min. V_F	Forward Voltage [4] I_F = 350 mA max. V_F
8E	2.75 V	3.00 V
8F	3.00 V	3.25 V
8G	3.25 V	3.50 V
8H	3.50 V	3.75 V

Chromaticity Coordinate Groups [3)]

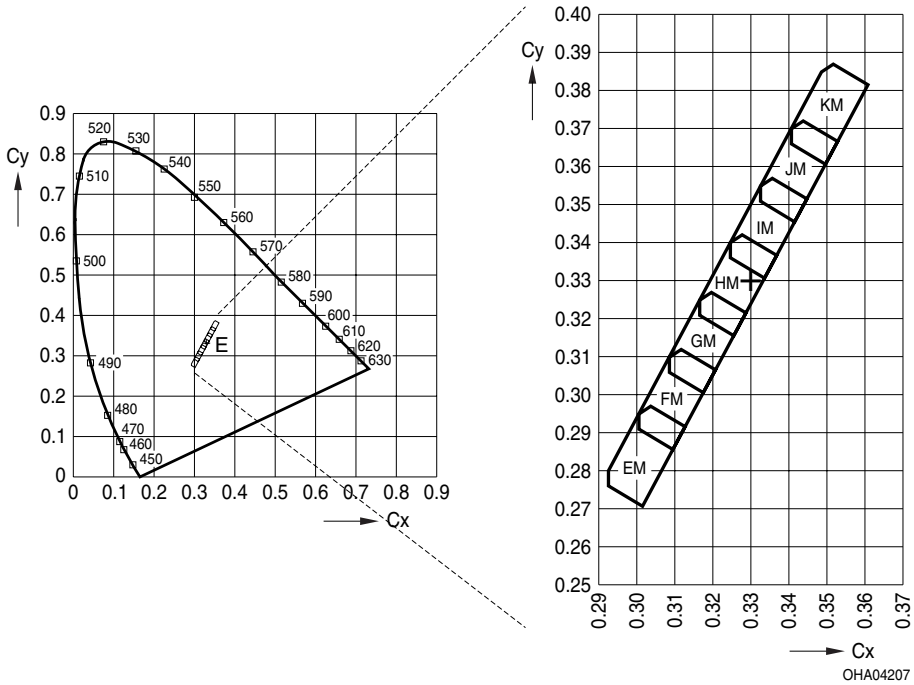

Chromaticity Coordinate Groups [3)]

Group	Cx	Cy
EM	0.3018	0.2704
	0.2926	0.2757
	0.2926	0.2797
	0.3006	0.2947
	0.3038	0.2967
	0.3130	0.2914
FM	0.3098	0.2854
	0.3006	0.2907
	0.3006	0.2947
	0.3086	0.3097
	0.3118	0.3117
	0.3210	0.3064
GM	0.3178	0.3004
	0.3086	0.3057
	0.3086	0.3097
	0.3166	0.3247
	0.3198	0.3267
	0.3290	0.3214

Group	Cx	Cy
HM	0.3258	0.3154
	0.3166	0.3207
	0.3166	0.3247
	0.3246	0.3397
	0.3278	0.3417
	0.3370	0.3364
IM	0.3338	0.3304
	0.3246	0.3357
	0.3246	0.3397
	0.3326	0.3547
	0.3358	0.3567
	0.3450	0.3514

Group	Cx	Cy
JM	0.3418	0.3454
	0.3326	0.3507
	0.3326	0.3547
	0.3406	0.3697
	0.3438	0.3717
	0.3530	0.3664
KM	0.3498	0.3604
	0.3406	0.3657
	0.3406	0.3697
	0.3486	0.3847
	0.3518	0.3867
	0.3610	0.3814

OSRAM
Opto Semiconductors

Group Name on Label

Example: KY-EM-8E

Brightness	Color Chromaticity	Forward Voltage
KY	EM	8E

Relative Spectral Emission [6)]

$\Phi_{rel} = f(\lambda)$; $I_F = 350$ mA; $T_S = 25$ °C

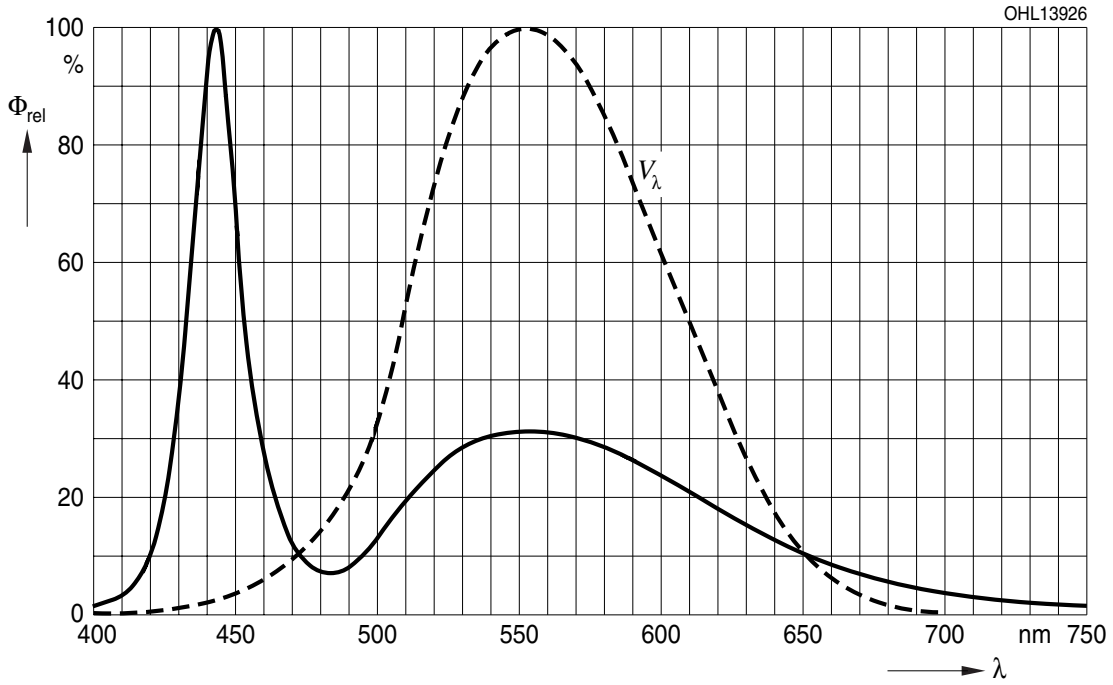

Radiation Characteristics [6)]

$I_{rel} = f(\phi)$; $T_S = 25$ °C

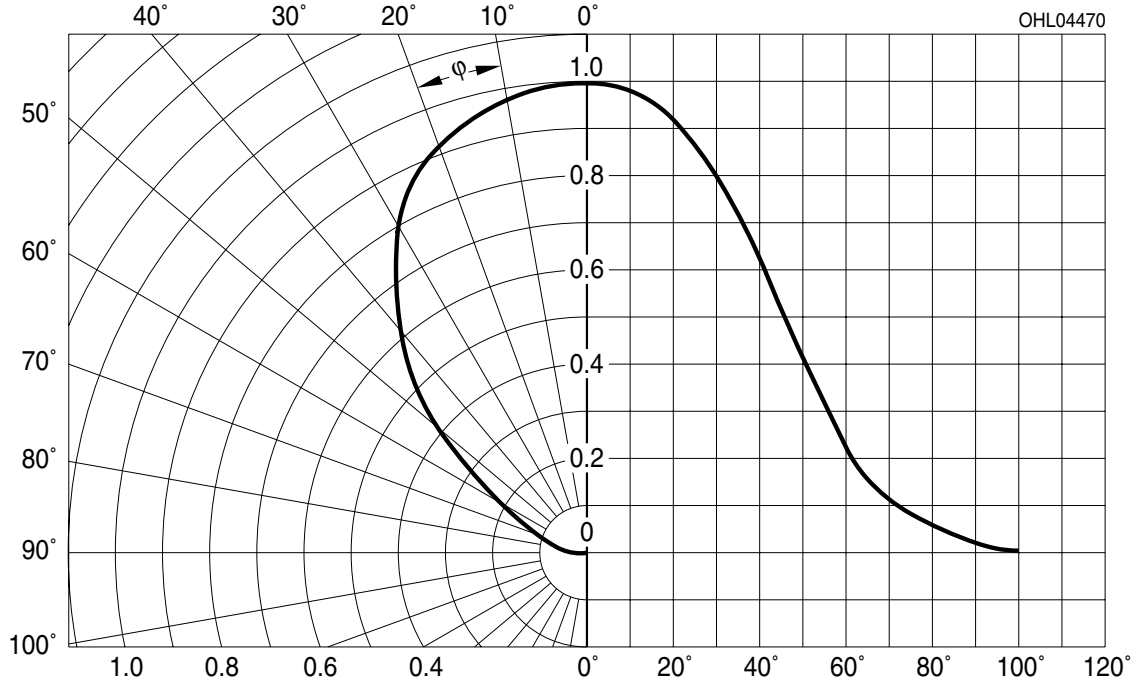

OSRAM
Opto Semiconductors

Forward current [6), 7)]

$I_F = f(V_F)$; T_S = 25 °C

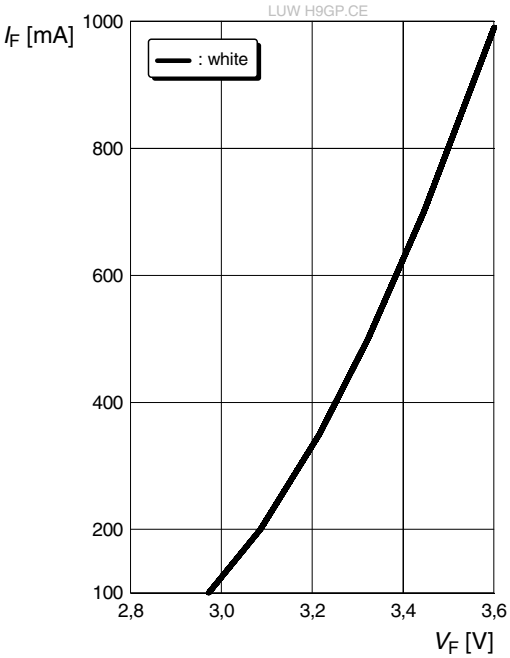

Relative Luminous Flux [6), 7)]

$\Phi_v/\Phi_v(350\ mA) = f(I_F)$; T_S = 25 °C

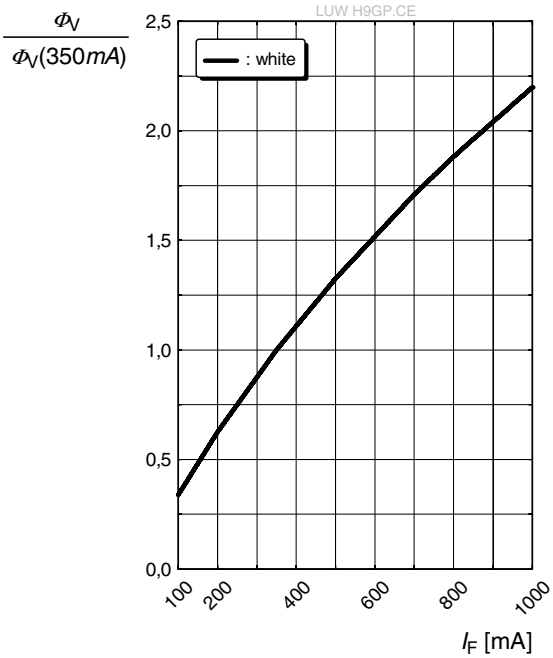

Chromaticity Coordinate Shift [6)]

$\Delta Cx, \Delta Cy = f(I_F)$; T_S = 25 °C

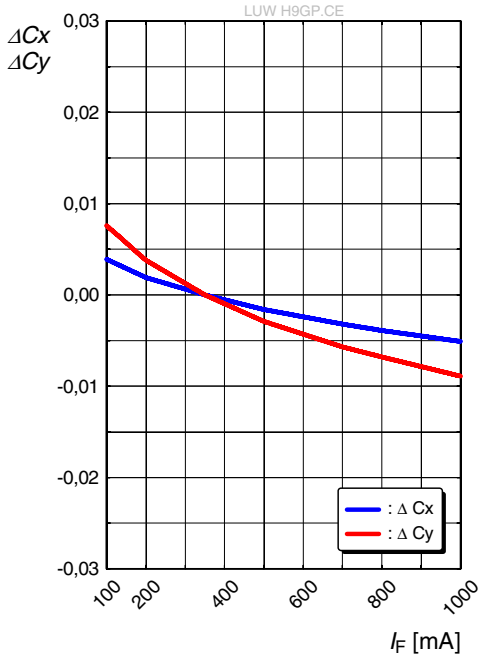

OSRAM
Opto Semiconductors

Forward Voltage [6)]

$\Delta V_F = V_F - V_F(25\ °C) = f(T_j)$; $I_F = 350$ mA

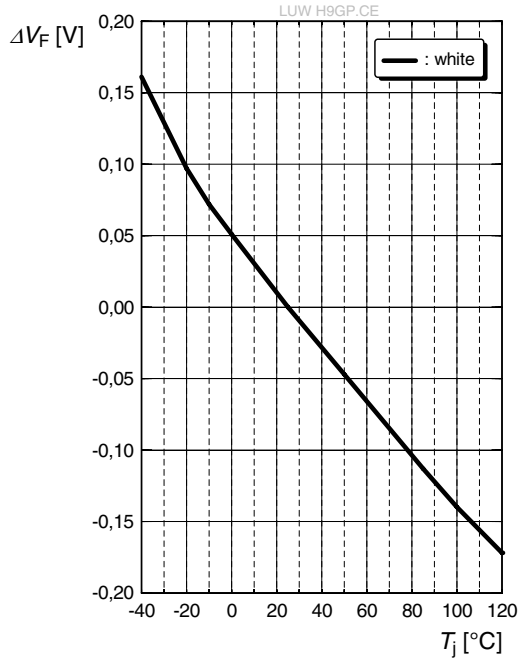

Relative Luminous Flux [6)]

$\Phi_v/\Phi_v(25\ °C) = f(T_j)$; $I_F = 350$ mA

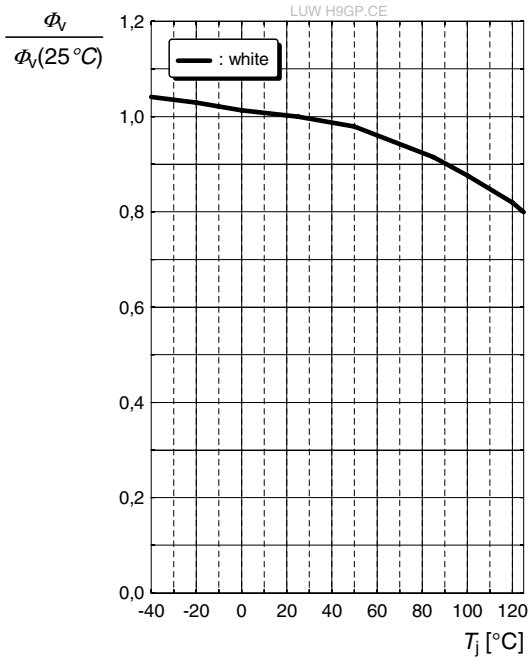

Chromaticity Coordinate Shift [6)]

ΔCx, $\Delta Cy = f(T_j)$; $I_F = 350$ mA

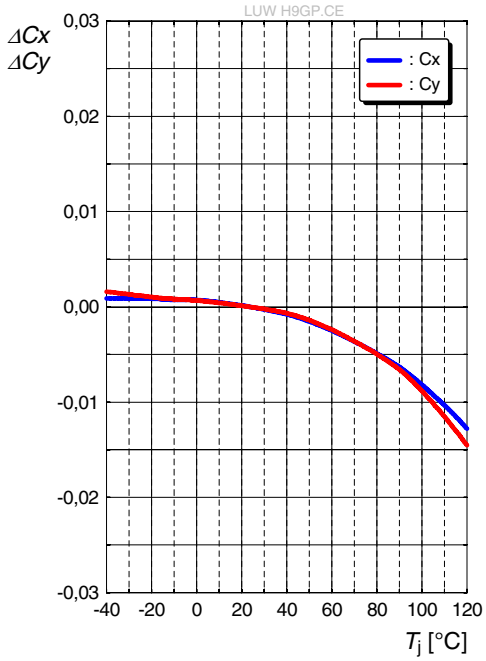

OSRAM
Opto Semiconductors

Max. Permissible Forward Current

$I_F = f(T)$

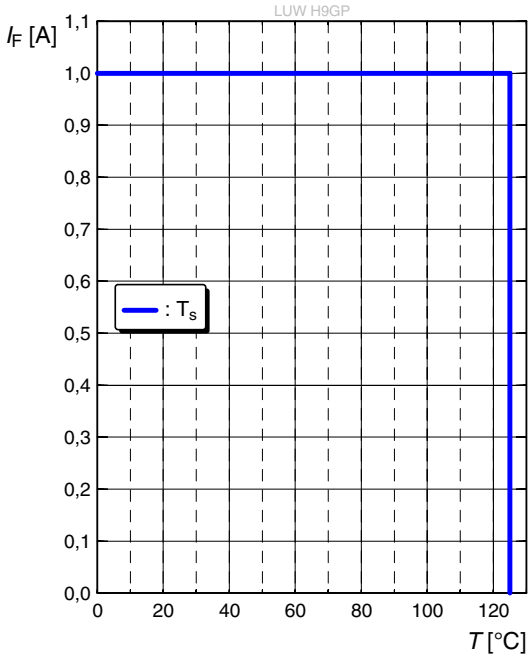

Permissible Pulse Handling Capability

$I_F = f(t_p)$; D: Duty cycle

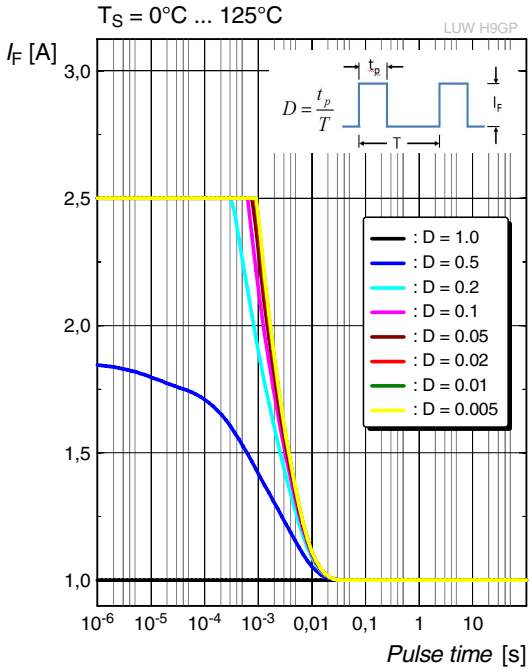

OSRAM
Opto Semiconductors

Dimensional Drawing [8)]

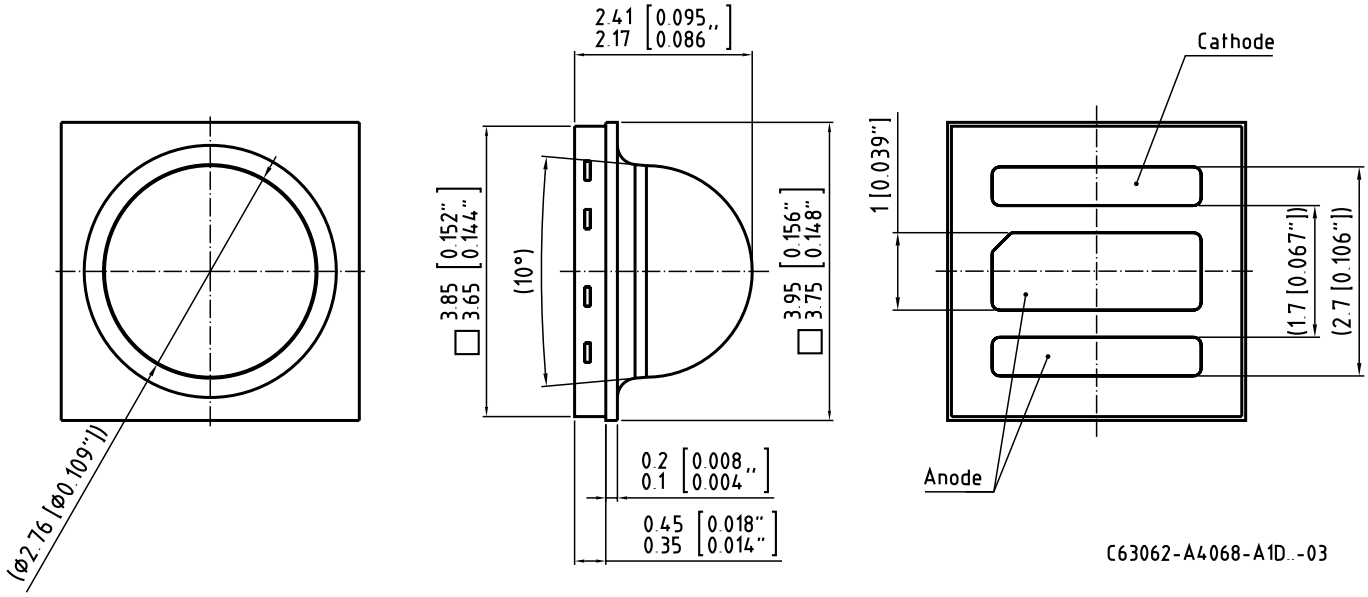

Further Information:

Approximate Weight:	32.0 mg
Package marking:	Cathode
Corrosion test:	Class: 3B Test condition: 40°C / 90 % RH / 15 ppm H_2S / 14 days (stricter than IEC 60068-2-43)
ESD advice:	The device is protected by ESD device which is connected in parallel to the Chip.

Recommended Solder Pad [8)]

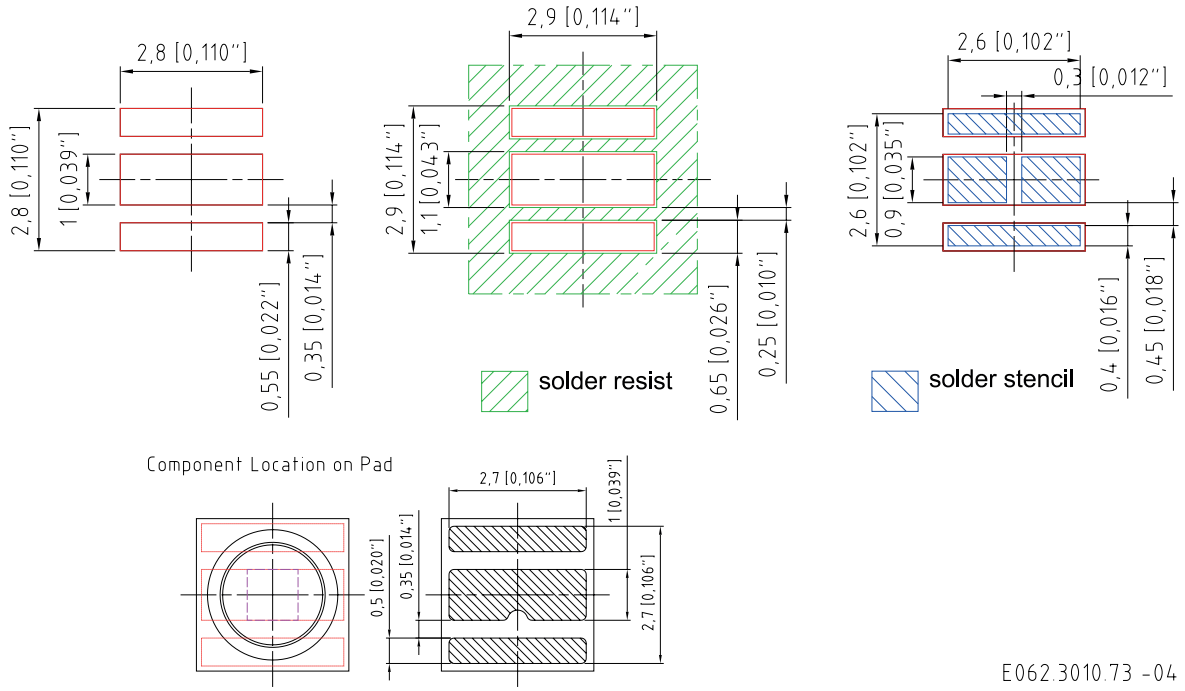

For superior solder joint connectivity results we recommend soldering under standard nitrogen atmosphere. In case the PCB layout of the application is intended to be used with other OSLON derivates or in future developed OSLON derivates, the heat sink must not be electrically connected to anode or cathode solder pad because of possible chip inverted polarity. Package not suitable for ultra sonic cleaning. To ensure a high solder joint reliability and to minimize the risk of solder joint cracks, the customer is responsible to evaluate the combination of PCB board and solder paste material for his application.

OSRAM
Opto Semiconductors

Reflow Soldering Profile

Product complies to MSL Level 2 acc. to JEDEC J-STD-020E

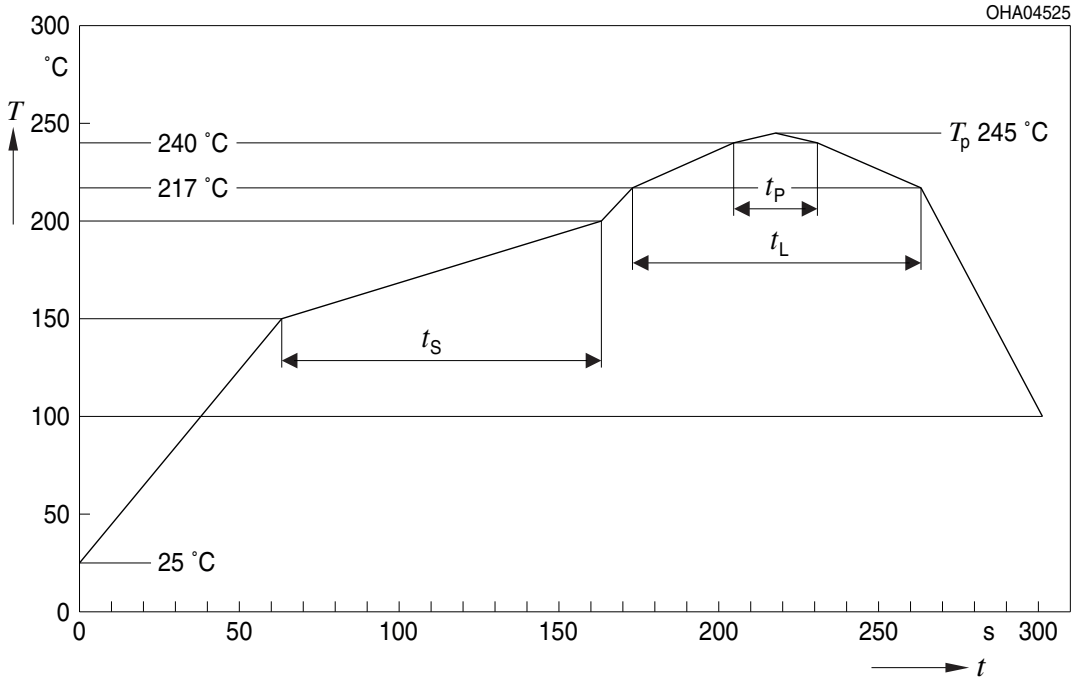

Profile Feature	Symbol	Pb-Free (SnAgCu) Assembly			Unit
		Minimum	Recommendation	Maximum	
Ramp-up rate to preheat*) 25 °C to 150 °C			2	3	K/s
Time t_S T_{Smin} to T_{Smax}	t_S	60	100	120	s
Ramp-up rate to peak*) T_{Smax} to T_P			2	3	K/s
Liquidus temperature	T_L		217		°C
Time above liquidus temperature	t_L		80	100	s
Peak temperature	T_P		245	260	°C
Time within 5 °C of the specified peak temperature T_P - 5 K	t_P	10	20	30	s
Ramp-down rate* T_P to 100 °C			3	6	K/s
Time 25 °C to T_P				480	s

All temperatures refer to the center of the package, measured on the top of the component
* slope calculation DT/Dt: Dt max. 5 s; fulfillment for the whole T-range

OSRAM
Opto Semiconductors

Taping [8)]

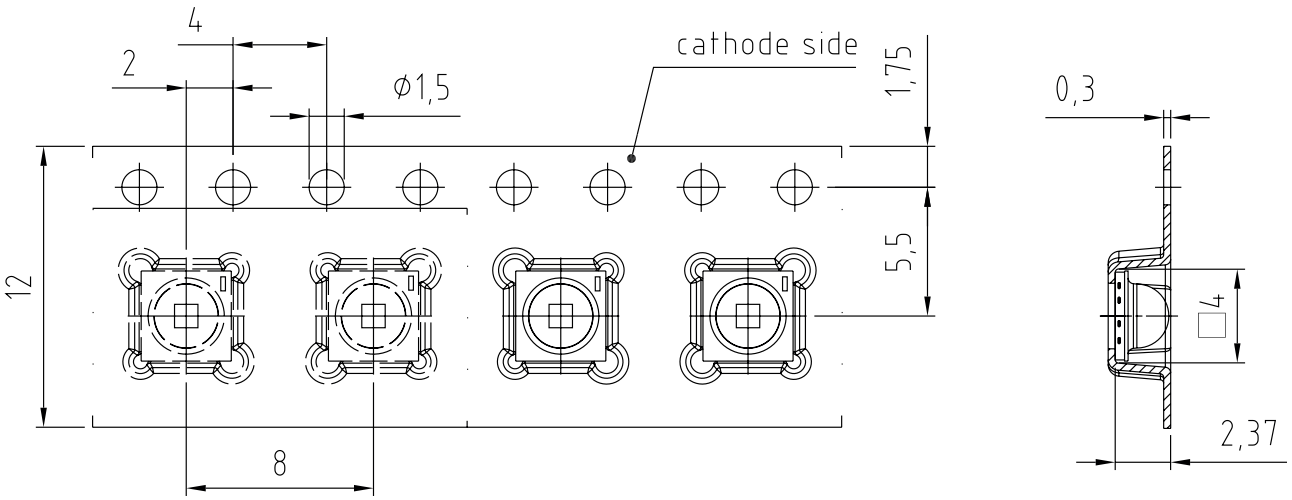

C63062-A4068-B10 -12

OSRAM
Opto Semiconductors

Tape and Reel [9)]

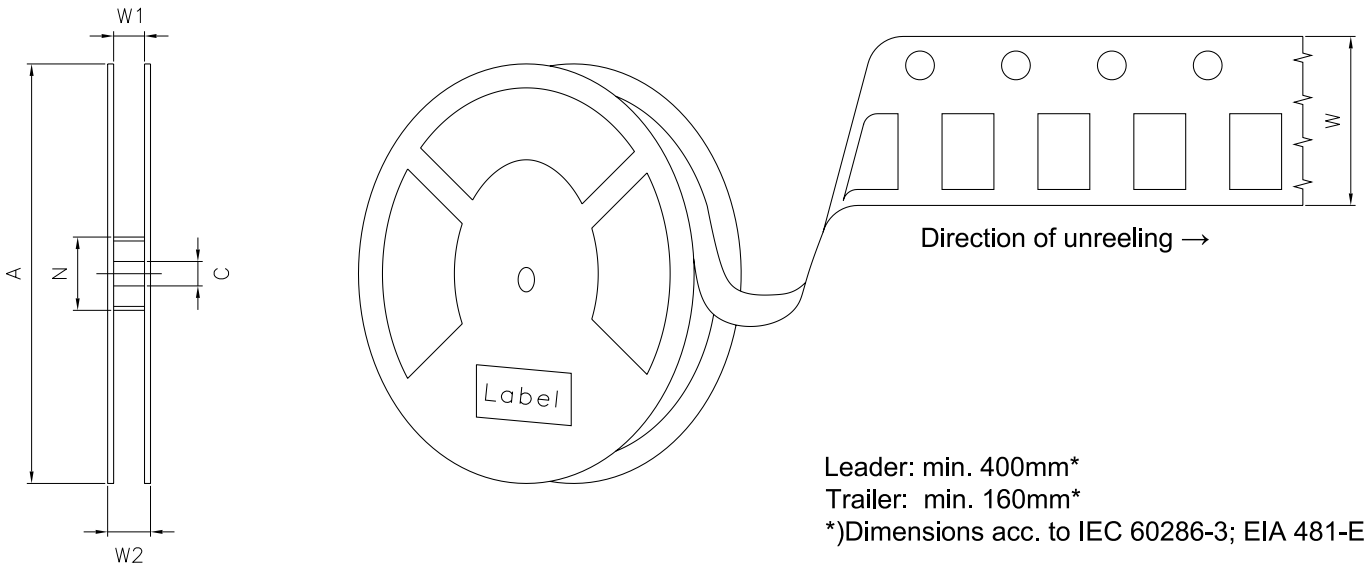

Leader: min. 400mm*
Trailer: min. 160mm*
*)Dimensions acc. to IEC 60286-3; EIA 481-E

Reel Dimensions

A	W	N_{min}	W_1	$W_{2\,max}$	Pieces per PU
180 mm	12 + 0.3 / - 0.1 mm	60 mm	12.4 + 2 mm	18.4 mm	600
330 mm	12 + 0.3 / - 0.1 mm	60 mm	12.4 + 2 mm	18.4 mm	3000

OSRAM
Opto Semiconductors

Barcode-Product-Label (BPL)

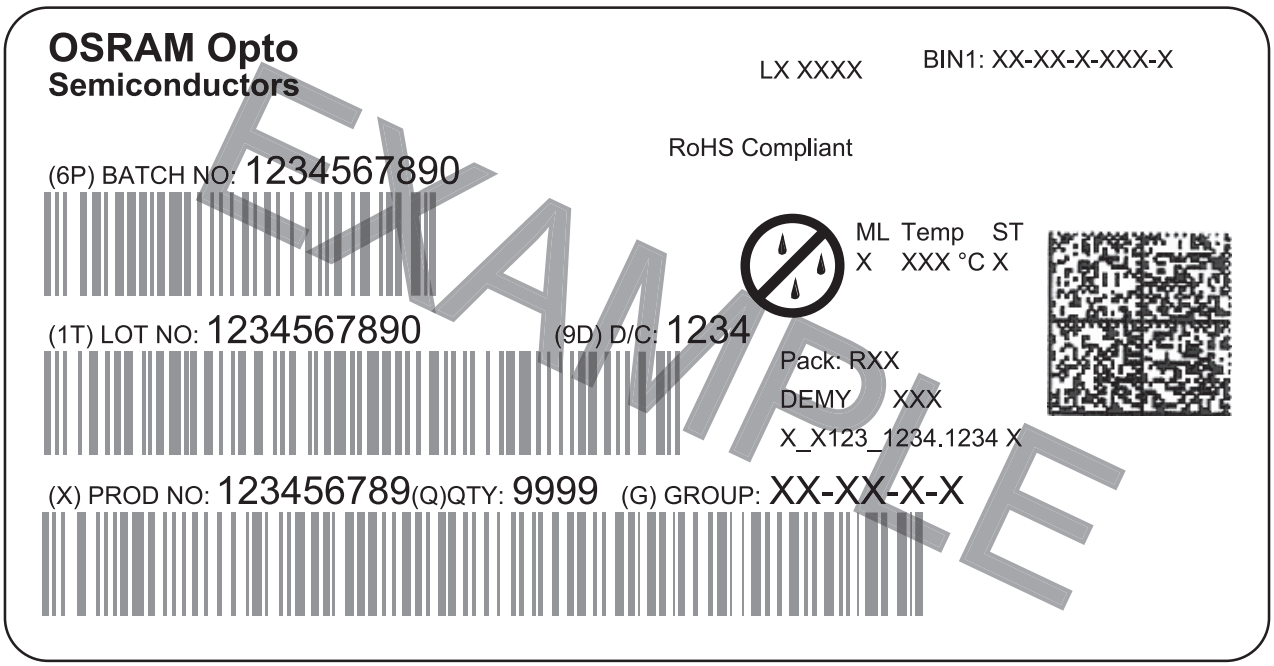

OHA04563

Dry Packing Process and Materials [8)]

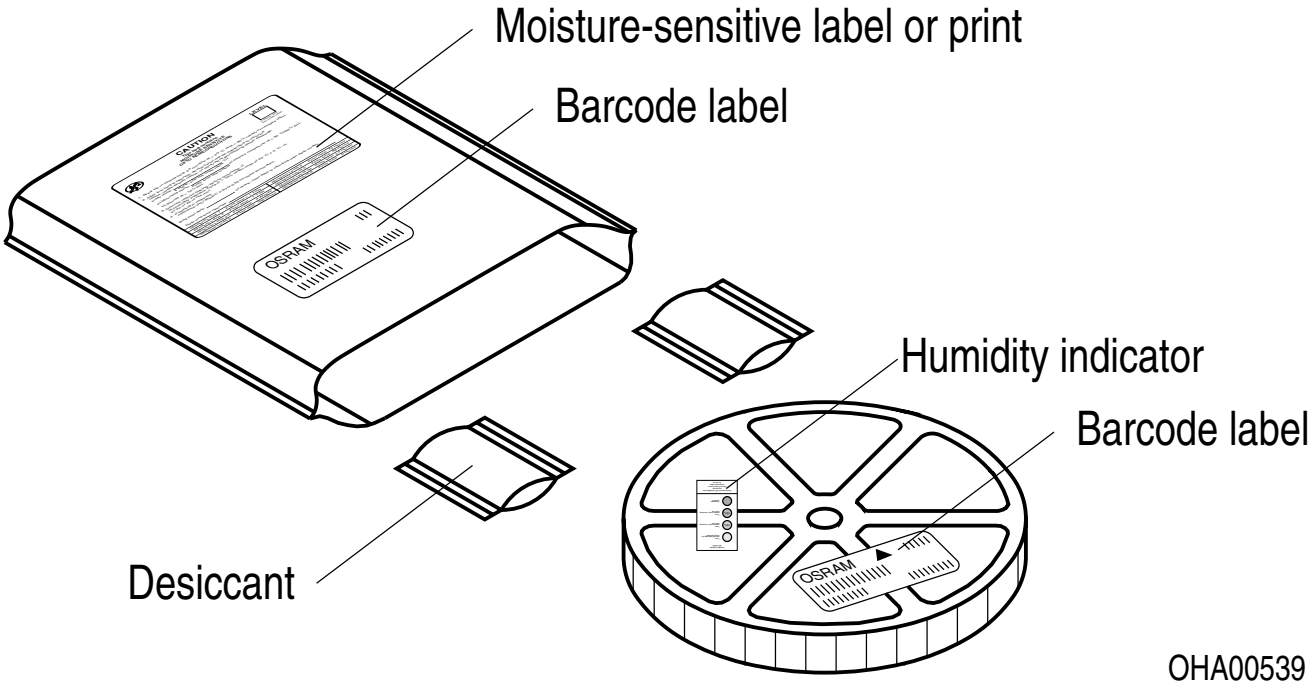

OHA00539

Moisture-sensitive product is packed in a dry bag containing desiccant and a humidity card according JEDEC-STD-033.

Type Designation System

Wavelength (λ_{dom} typ.)

A:	617 nm	amber
S:	633 nm	super red
Y:	590 nm	yellow
R:	625 nm	red

Emission ColorColor coordinates according CIE 1931 / Emission color:

CW:	warm white
CY:	color on demand yellow
UW:	ultra-white
W:	white
W2:	white, 2 chips

Technology concept
3: Silicone encapsulation (casted) platform: QFN

K: Automotive and Industry Product
L: Light Emitting Diode

Package Type
H: Top emitting device
Leadframe based
Black reflector package

Product-version

K	W		H	2	L	5	3	1	.	T	E

Lead / Package Properties
Toplooker:

2:	3731	H:	3737
3:	3742	I:	3746
4:	3753	J:	3757
5:	3746	K:	3768
9:	leadless	L:	3779
W:	next chip development		

Encapsulant Type / Lens Properties
L: no lens (Lambertian)
P: planar compression molded silicon (120°); with volume conversion
Q: planar compression molded silicon (120°); with layer conversion
G: outcoupling lens 90°

Chip Technology:
5: standard power class
P: power performance

Converted Colors
T: greenish cold white
C: intermediate cold white

Binning Information:
E: ECE binning: IEC 62707 (i.e. ebxD68)
K: binning within ECE

Notes

The evaluation of eye safety occurs according to the standard IEC 62471:2006 (photo biological safety of lamps and lamp systems). Within the risk grouping system of this IEC standard, the device specified in this data sheet falls into the class **low risk (exposure time 100 s)**. Under real circumstances (for exposure time, conditions of the eye pupils, observation distance), it is assumed that no endangerment to the eye exists from these devices. As a matter of principle, however, it should be mentioned that intense light sources have a high secondary exposure potential due to their blinding effect. When looking at bright light sources (e.g. headlights), temporary reduction in visual acuity and afterimages can occur, leading to irritation, annoyance, visual impairment, and even accidents, depending on the situation.

Subcomponents of this device contain, in addition to other substances, metal filled materials including silver. Metal filled materials can be affected by environments that contain traces of aggressive substances. Therefore, we recommend that customers minimize device exposure to aggressive substances during storage, production, and use. Devices that showed visible discoloration when tested using the described tests above did show no performance deviations within failure limits during the stated test duration. Respective failure limits are described in the IEC60810.

For further application related information please visit www.osram-os.com/appnotes

Disclaimer

Attention please!
The information describes the type of component and shall not be considered as assured characteristics. Terms of delivery and rights to change design reserved. Due to technical requirements components may contain dangerous substances.
For information on the types in question please contact our Sales Organization.
If printed or downloaded, please find the latest version on the OSRAM OS website.

Packing
Please use the recycling operators known to you. We can also help you – get in touch with your nearest sales office. By agreement we will take packing material back, if it is sorted. You must bear the costs of transport. For packing material that is returned to us unsorted or which we are not obliged to accept, we shall have to invoice you for any costs incurred.

Product and functional safety devices/applications or medical devices/applications
OSRAM OS components are not developed, constructed or tested for the application as safety relevant component or for the application in medical devices.
OSRAM OS products are not qualified at module and system level for such application.

In case buyer – or customer supplied by buyer – considers using OSRAM OS components in product safety devices/applications or medical devices/applications, buyer and/or customer has to inform the local sales partner of OSRAM OS immediately and OSRAM OS and buyer and /or customer will analyze and coordinate the customer-specific request between OSRAM OS and buyer and/or customer.

Glossary

1) **Brightness:** Brightness values are measured during a current pulse of typically 25 ms, with an internal reproducibility of ±8 % and an expanded uncertainty of ±11 % (acc. to GUM with a coverage factor of k = 3).

2) **Reverse Operation:** Reverse Operation of 10 hours is permissible in total. Continuous reverse operation is not allowed.

3) **Chromaticity coordinate groups:** Chromaticity coordinates are measured during a current pulse of typically 25 ms, with an internal reproducibility of ±0.005 and an expanded uncertainty of ±0.01 (acc. to GUM with a coverage factor of k = 3).

4) **Forward Voltage:** The forward voltage is measured during a current pulse of typically 8 ms, with an internal reproducibility of ±0.05 V and an expanded uncertainty of ±0.1 V (acc. to GUM with a coverage factor of k = 3).

5) **Thermal Resistance:** Rth max is based on statistic values (6σ).

6) **Typical Values:** Due to the special conditions of the manufacturing processes of semiconductor devices, the typical data or calculated correlations of technical parameters can only reflect statistical figures. These do not necessarily correspond to the actual parameters of each single product, which could differ from the typical data and calculated correlations or the typical characteristic line. If requested, e.g. because of technical improvements, these typ. data will be changed without any further notice.

7) **Characteristic curve:** In the range where the line of the graph is broken, you must expect higher differences between single devices within one packing unit.

8) **Tolerance of Measure:** Unless otherwise noted in drawing, tolerances are specified with ±0.1 and dimensions are specified in mm.

9) **Tape and Reel:** All dimensions and tolerances are specified acc. IEC 60286-3 and specified in mm.

Revision History

Version	Date	Change
1.6	2020-01-30	Features Further Information Recommended Solder Pad Reel Dimensions Schematic Transportation Box Dimensions of Transportation Box Type Designation System Notes Disclaimer Glossary

Published by OSRAM Opto Semiconductors GmbH
Leibnizstraße 4, D-93055 Regensburg
www.osram-os.com © All Rights Reserved.

EU RoHS and China RoHS compliant product

此产品符合欧盟 RoHS 指令的要求；
按照中国的相关法规和标准，不含有毒有害物质或元素。

OSRAM
Opto Semiconductors