OSRAM KY DMLN31.FY

Datasheet

Published by ams-OSRAM AG
Tobelbader Strasse 30, 8141 Premstaetten, Austria
Phone +43 3136 500-0
ams-osram.com
© All rights reserved

SYNIOS® P2720

KY DMLN31.FY

This compact LED device is part of the SYNIOS P2720 family. Given the scalability of this product family, it provides full performance and flexibility with just one footprint.
The KY DMLN31.FY product is meant to provide superior light quality in ¼ mm² chip size class.

Applications

- Static Signaling

Features

- Package: SMD epoxy package
- Chip technology: UX:3
- Typ. Radiation: 120° (Lambertian emitter)
- Color: Cx = 0.57, Cy = 0.42 acc. to CIE 1931 (● converted yellow)
- Corrosion Robustness Class: 3B
- Qualifications: AEC-Q102 Qualified with RV-level 1
- ESD: 8 kV acc. to ANSI/ESDA/JEDEC JS-001 (HBM, Class 3B)

Ordering Information

Type	Luminous Flux [1] I_F = 150 mA Φ_V	Ordering Code
KY DMLN31.FY-7G7H-5F-8E8G	22.4 ... 40.0 lm	Q65111A6199

Maximum Ratings

Parameter	Symbol		Values
Operating Temperature	T_{op}	min. max.	-40 °C 125 °C
Storage Temperature	T_{stg}	min. max.	-40 °C 125 °C
Junction Temperature	T_j	max.	150 °C
Junction Temperature for short time applications*	T_j	max.	175 °C
Forward current T_S = 25 °C	I_F	min. max.	5 mA 200 mA
Surge current t ≤ 10 µs; D = 0.005 ; T_S = 25 °C	I_{FS}	max.	750 mA
ESD withstand voltage acc. to ANSI/ESDA/JEDEC JS-001 (HBM, Class 3B)	V_{ESD}		8 kV
Reverse current [2)]	I_R	max.	200 mA

* The median lifetime (L70/B50) for Tj = 175°C is 100h.

Characteristics

I_F = 150 mA; T_S = 25 °C

Parameter	Symbol		Values
Chromaticity Coordinate [3]	Cx	typ.	0.57
	Cy	typ.	0.42
Viewing angle at 50% I_V	2φ	typ.	120 °
Forward Voltage [4] I_F = 150 mA	V_F	min. typ. max.	2.75 V 2.95 V 3.50 V
Reverse voltage (ESD device)	$V_{R\ ESD}$	min.	45 V
Reverse voltage [2] I_R = 20 mA	V_R	max.	1.2 V
Real thermal resistance junction/solderpoint [5]	$R_{thJS\ real}$	typ. max.	18 K / W 20 K / W
Electrical thermal resistance junction/solderpoint [5] with efficiency η_e = 20 %	$R_{thJS\ elec.}$	typ. max.	14 K / W 16 K / W

Brightness Groups

Group	Luminous Flux [1] I_F = 150 mA min. Φ_V	Luminous Flux [1] I_F = 150 mA max. Φ_V	Luminous Intensity [6] I_F = 150 mA typ. I_v
7G	22.4 lm	25.0 lm	7.8 cd
8G	25.0 lm	28.0 lm	8.7 cd
5H	28.0 lm	31.5 lm	9.8 cd
6H	31.5 lm	35.5 lm	11.1 cd
7H	35.5 lm	40.0 lm	12.5 cd

Forward Voltage Groups

Group	Forward Voltage [4] I_F = 150 mA min. V_F	Forward Voltage [4] I_F = 150 mA max. V_F
8E	2.75 V	3.00 V
8F	3.00 V	3.25 V
8G	3.25 V	3.50 V

Chromaticity Coordinate Groups

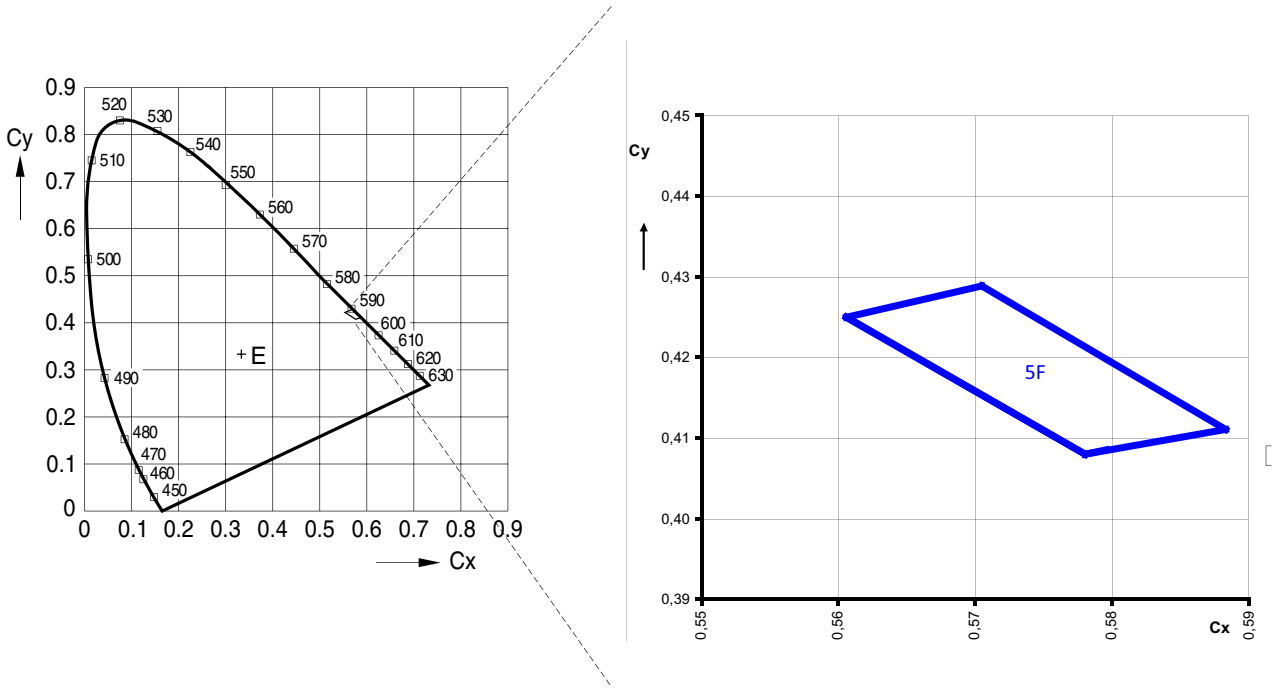

Chromaticity Coordinate Groups [3)]

Group	Cx	Cy
5F	0.5606	0.4250
	0.5705	0.4289
	0.5883	0.4111
	0.5780	0.4080

Group Name on Label

Example: 5H-5F-8E

Brightness	Color Chromaticity	Forward Voltage
5H	5F	8E

Relative Spectral Emission [6)]

$\Phi_{rel} = f(\lambda)$; I_F = 150 mA; T_S = 25 °C

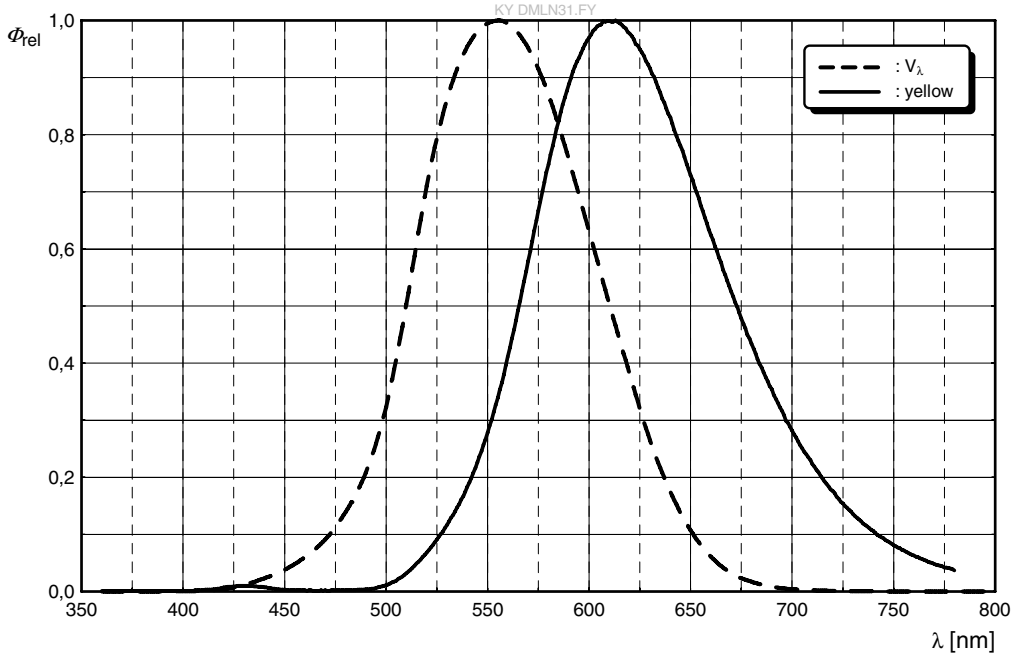

Radiation Characteristics [6)]

$I_{rel} = f(\phi)$; T_S = 25 °C

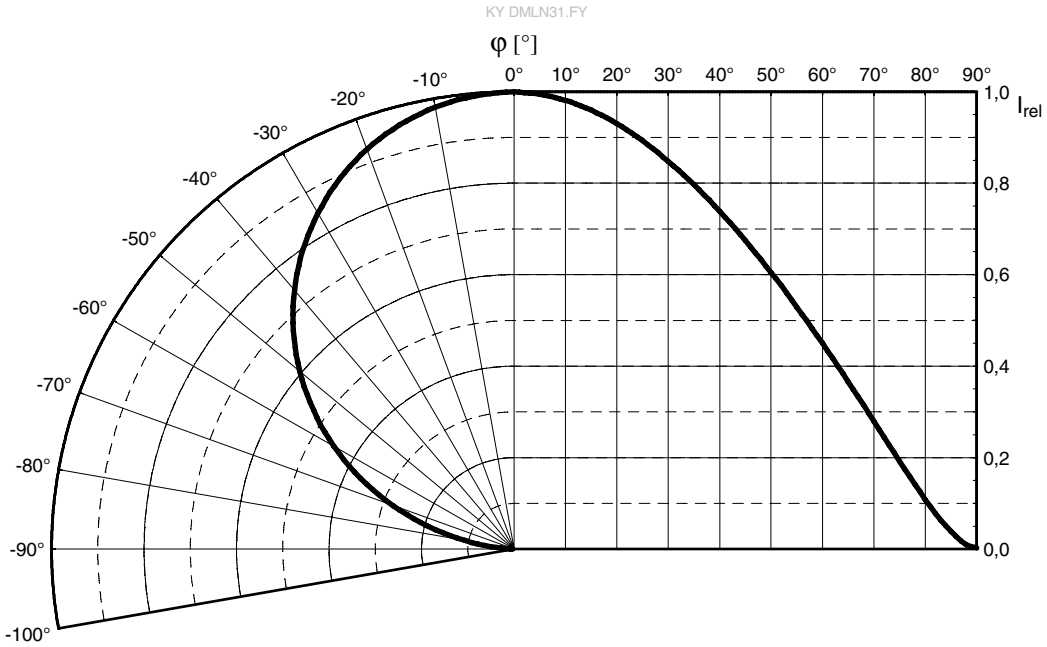

Forward current 6), 7)

$I_F = f(V_F)$; T_S = 25 °C

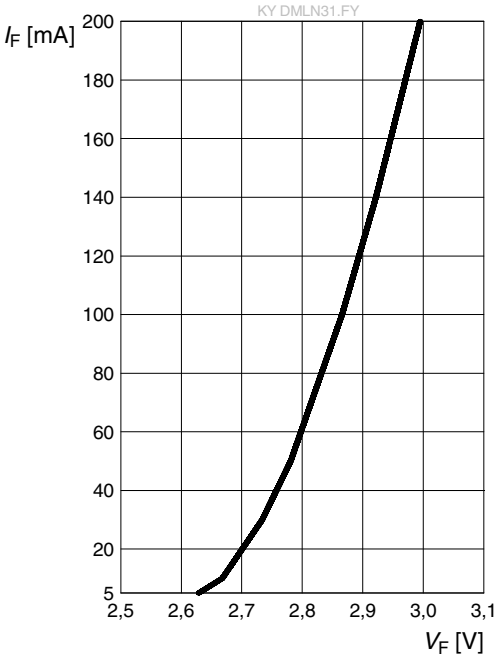

Relative Luminous Flux 6), 7)

$\Phi_v/\Phi_v(150\ mA) = f(I_F)$; T_S = 25 °C

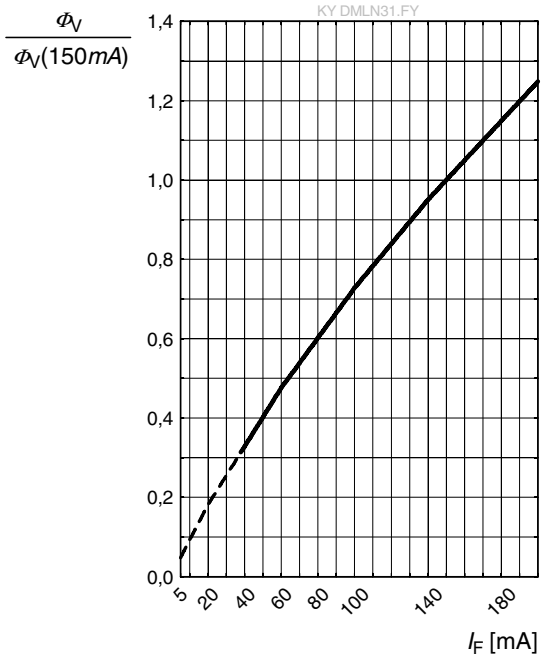

Chromaticity Coordinate Shift 6)

$\Delta Cx, \Delta Cy = f(I_F)$; T_S = 25 °C

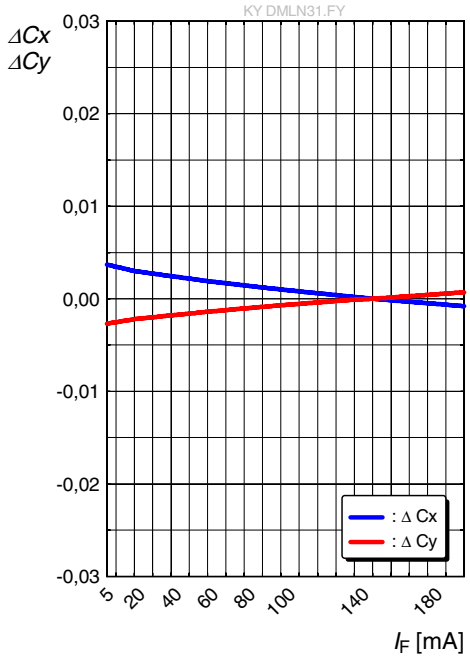

Forward Voltage [6]

$\Delta V_F = V_F - V_F(25\ °C) = f(T_j);\ I_F = 150\ mA$

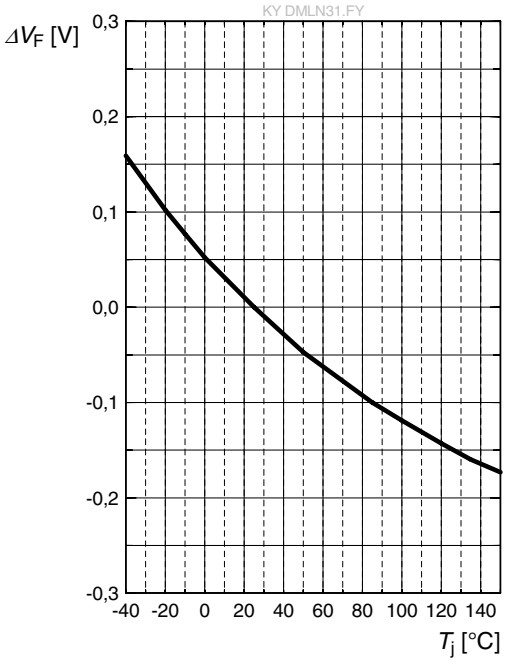

Relative Luminous Flux [6]

$\Phi_v/\Phi_v(25\ °C) = f(T_j);\ I_F = 150\ mA$

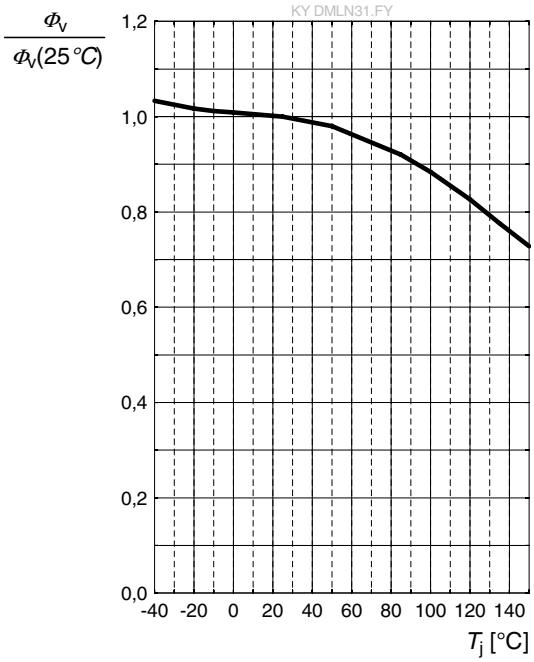

Chromaticity Coordinate Shift [6]

$\Delta Cx,\ \Delta Cy = f(T_j);\ I_F = 150\ mA$

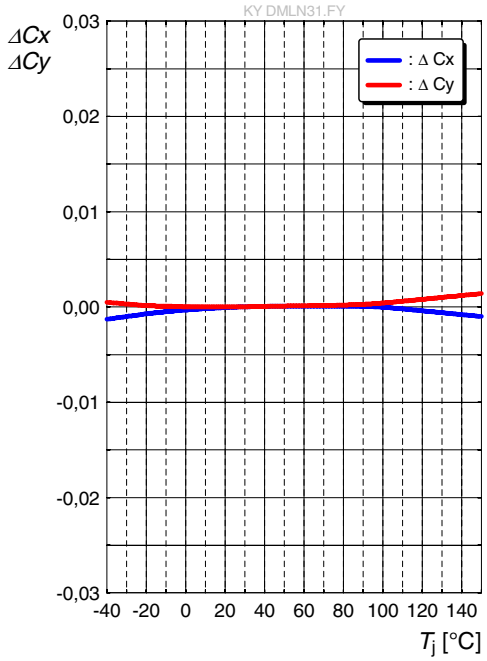

Max. Permissible Forward Current

$I_F = f(T)$

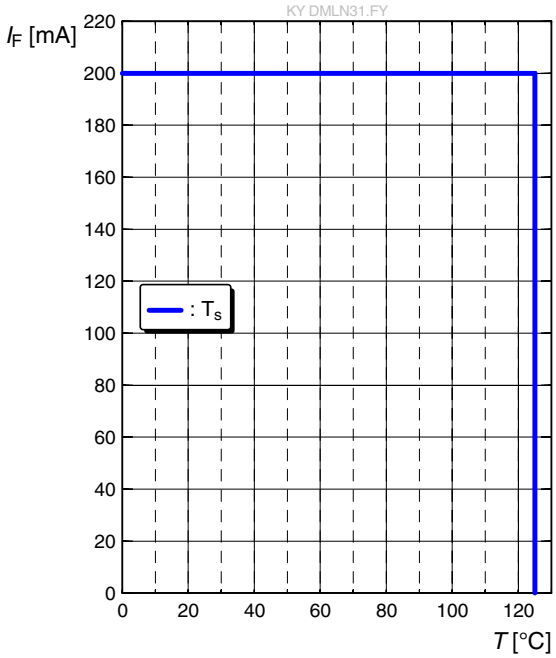

Permissible Pulse Handling Capability

$I_F = f(t_p)$; D: Duty cycle

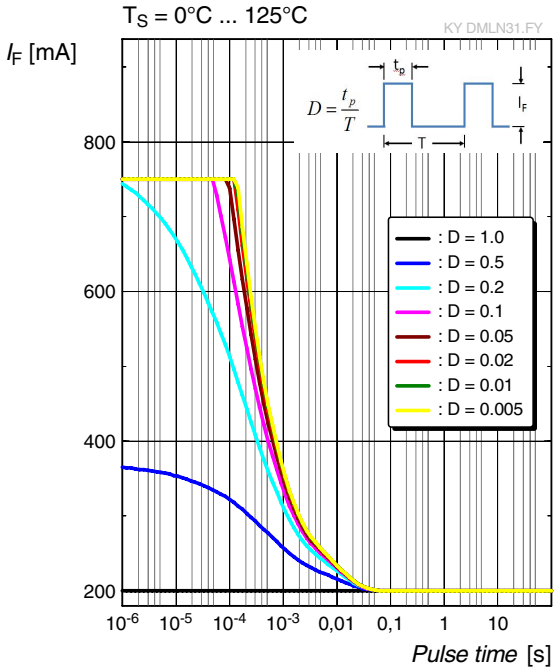

Dimensional Drawing [8)]

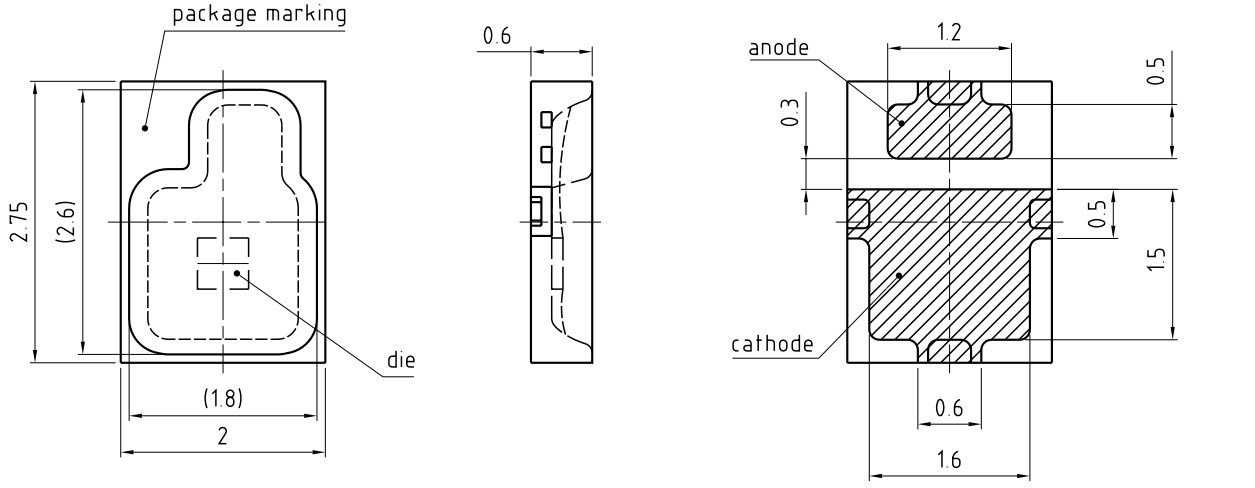

General tolerance ±0.1

Lead finish Au

C67062-A0116-A2-04

Further Information:

Approximate Weight: 11.2 mg

Corrosion test: Class: 3B
Test condition: 40°C / 90 % RH / 15 ppm H_2S / 14 days (stricter than IEC 60068-2-43)

ESD advice: The device is protected by ESD device which is connected in parallel to the Chip.

Electrical Internal Circuit

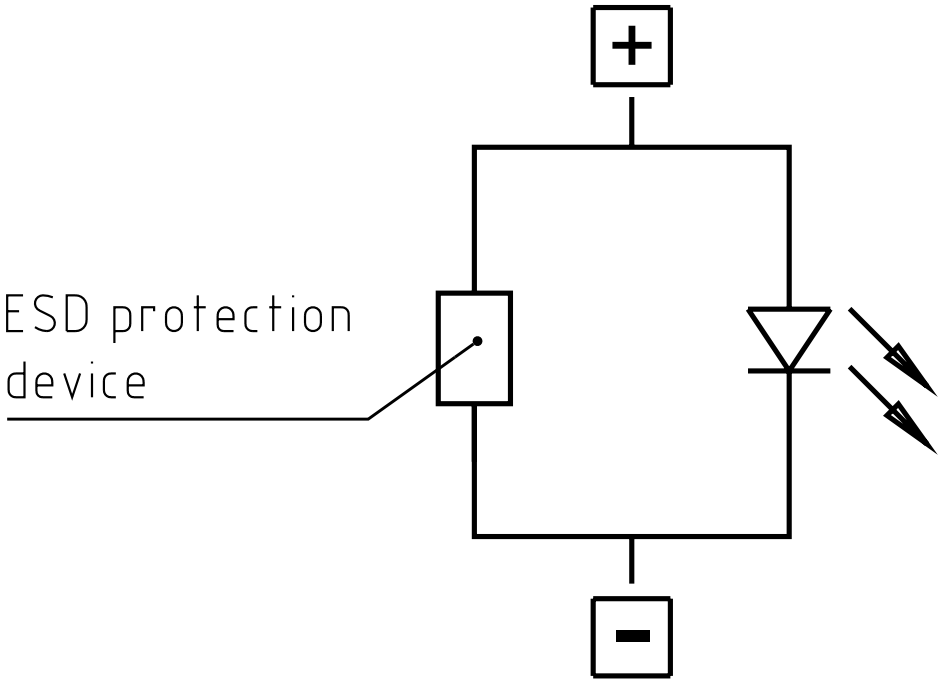

Recommended Solder Pad [8)]

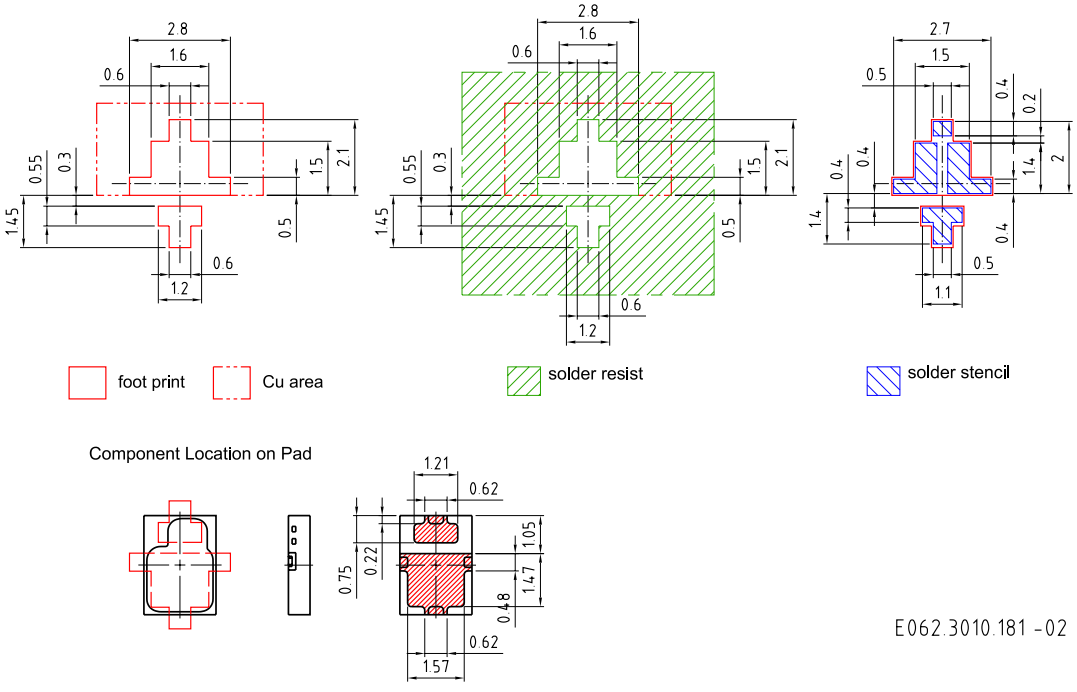

For superior solder joint connectivity results we recommend soldering under standard nitrogen atmosphere. Package not suitable for ultra sonic cleaning.

Reflow Soldering Profile

Product complies to MSL Level 2 acc. to JEDEC J-STD-020E

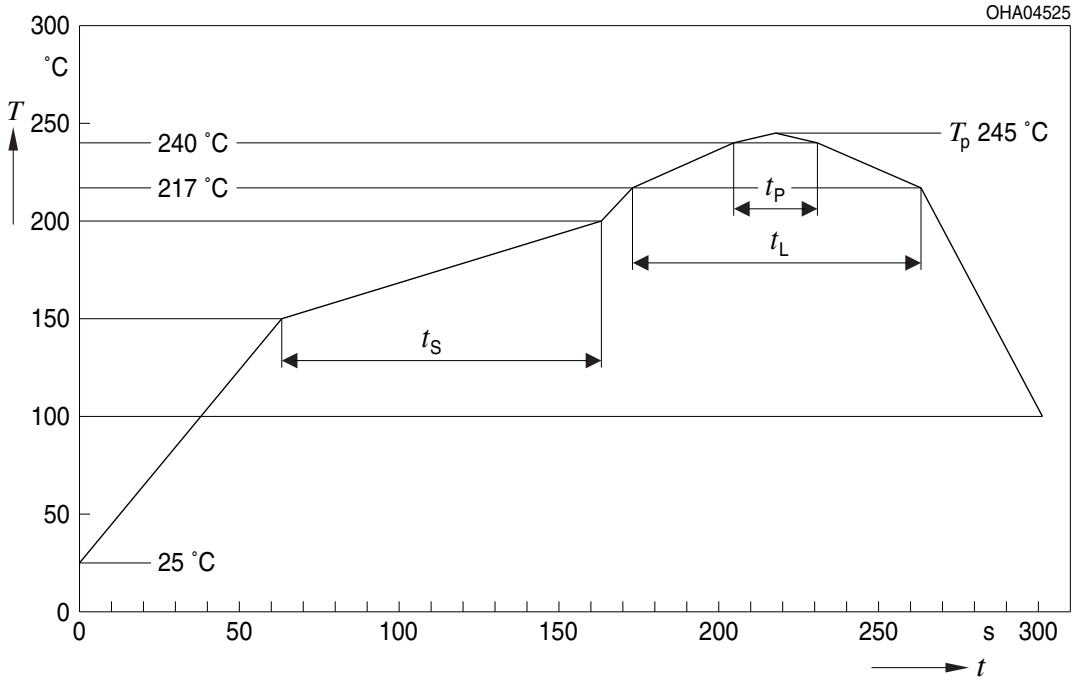

Profile Feature	Symbol	Pb-Free (SnAgCu) Assembly			Unit
		Minimum	Recommendation	Maximum	
Ramp-up rate to preheat*) 25 °C to 150 °C			2	3	K/s
Time t_S T_{Smin} to T_{Smax}	t_S	60	100	120	s
Ramp-up rate to peak*) T_{Smax} to T_P			2	3	K/s
Liquidus temperature	T_L		217		°C
Time above liquidus temperature	t_L		80	100	s
Peak temperature	T_P		245	260	°C
Time within 5 °C of the specified peak temperature T_P - 5 K	t_P	10	20	30	s
Ramp-down rate* T_P to 100 °C			3	6	K/s
Time 25 °C to T_P				480	s

All temperatures refer to the center of the package, measured on the top of the component
* slope calculation DT/Dt: Dt max. 5 s; fulfillment for the whole T-range

Taping [8)]

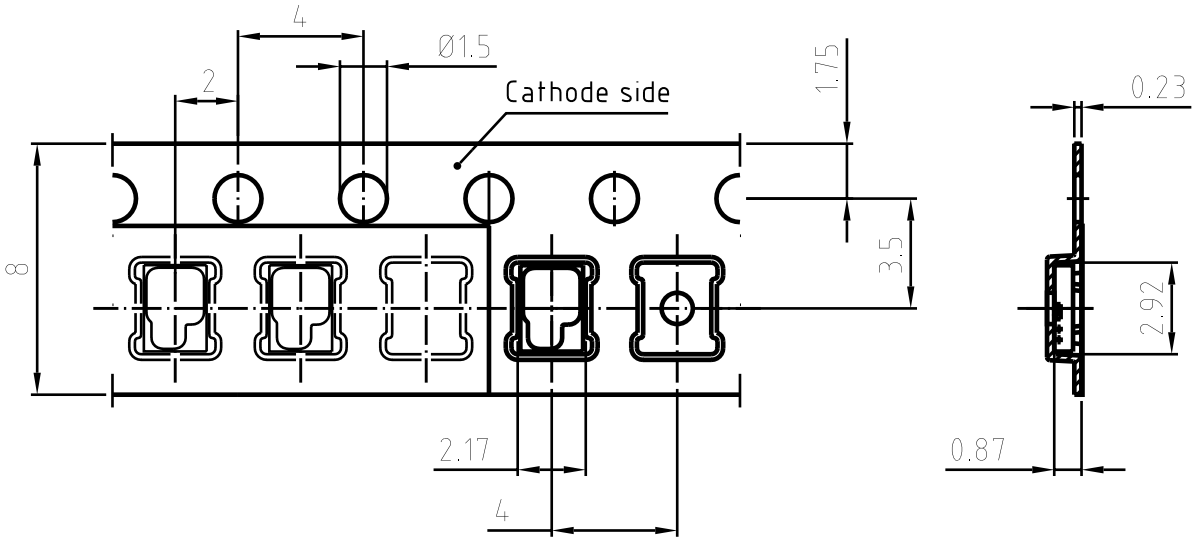

C67062-A0116-B9-04

Tape and Reel [9)]

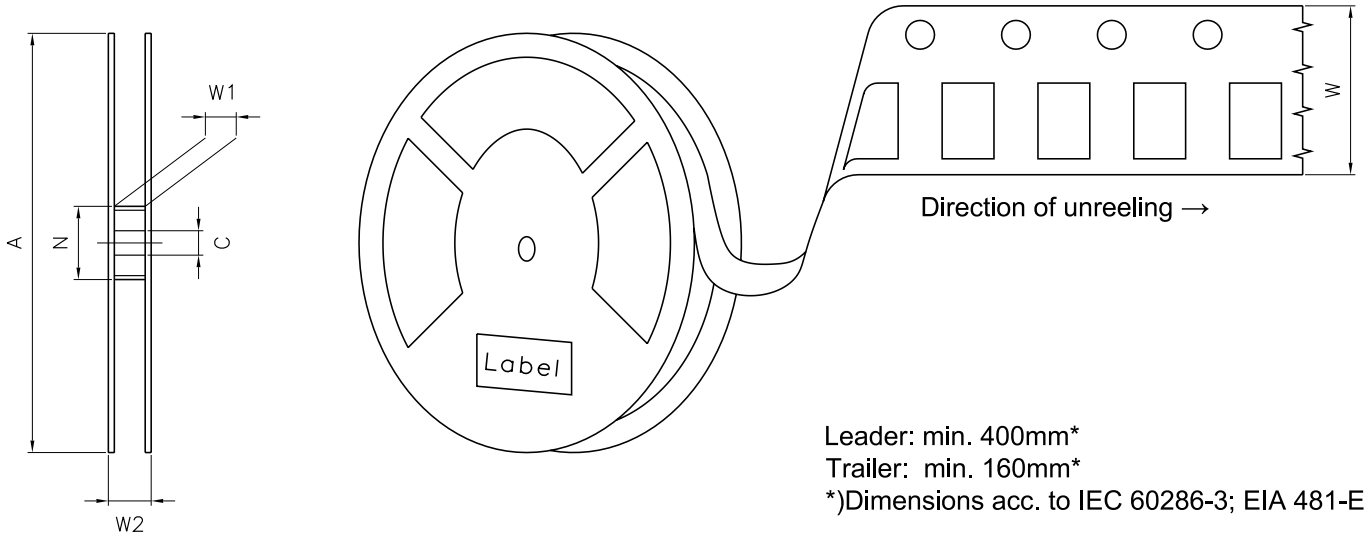

Leader: min. 400mm*
Trailer: min. 160mm*
*)Dimensions acc. to IEC 60286-3; EIA 481-E

Reel Dimensions

A	W	N_{min}	W_1	$W_{2\,max}$	Pieces per PU
180 mm	8 + 0.3 / - 0.1 mm	60 mm	8.4 + 2 mm	14.4 mm	4000

Barcode-Product-Label (BPL)

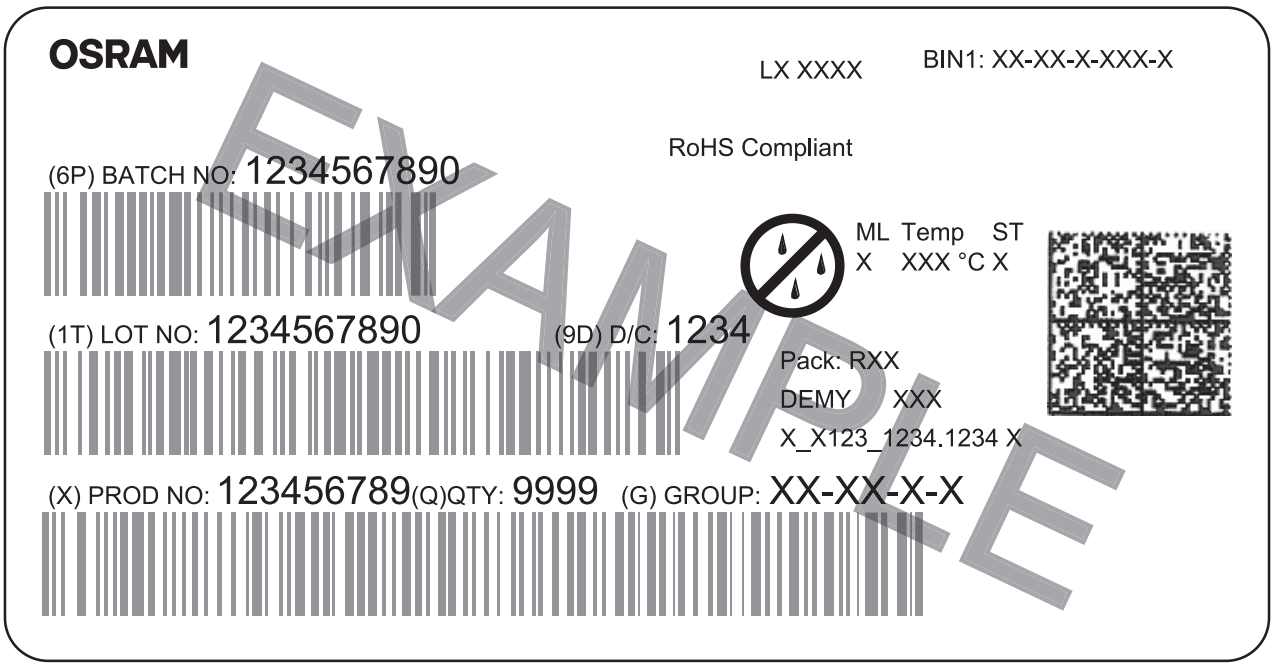

OHA04563

Dry Packing Process and Materials [8)]

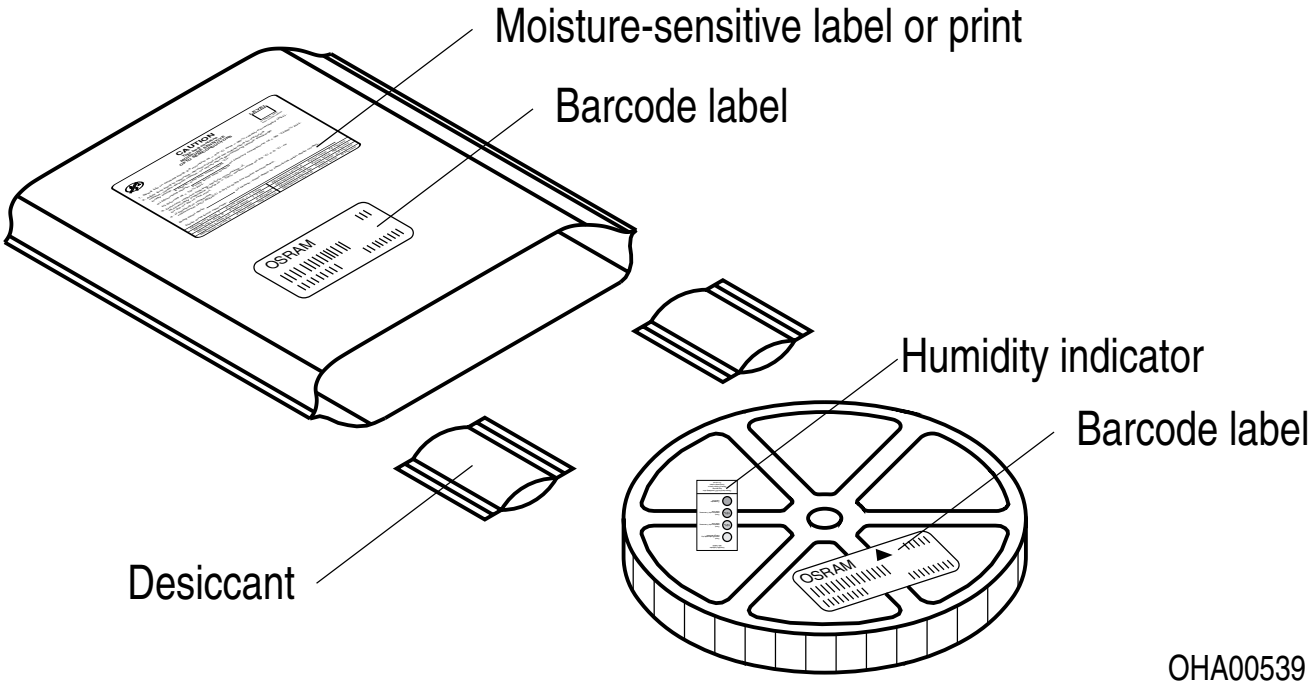

OHA00539

Moisture-sensitive product is packed in a dry bag containing desiccant and a humidity card according JEDEC-STD-033.

Notes

The evaluation of eye safety occurs according to the standard IEC 62471:2006 (photo biological safety of lamps and lamp systems). Within the risk grouping system of this IEC standard, the device specified in this data sheet fall into the class **exempt group (exposure time 10000 s)**. Under real circumstances (for exposure time, conditions of the eye pupils, observation distance), it is assumed that no endangerment to the eye exists from these devices. As a matter of principle, however, it should be mentioned that intense light sources have a high secondary exposure potential due to their blinding effect. When looking at bright light sources (e.g. headlights), temporary reduction in visual acuity and afterimages can occur, leading to irritation, annoyance, visual impairment, and even accidents, depending on the situation.

Subcomponents of this device contain, in addition to other substances, metal filled materials including silver. Metal filled materials can be affected by environments that contain traces of aggressive substances. Therefore, we recommend that customers minimize device exposure to aggressive substances during storage, production, and use. Devices that showed visible discoloration when tested using the described tests above did show no performance deviations within failure limits during the stated test duration. Respective failure limits are described in the IEC60810.

For further application related information please visit www.osram-os.com/appnotes

Disclaimer

Attention please!

The information describes the type of component and shall not be considered as assured characteristics.
Terms of delivery and rights to change design reserved. Due to technical requirements components may contain dangerous substances.
For information on the types in question please contact our Sales Organization.
If printed or downloaded, please find the latest version on our website.

Packing

Please use the recycling operators known to you. We can also help you – get in touch with your nearest sales office. By agreement we will take packing material back, if it is sorted. You must bear the costs of transport. For packing material that is returned to us unsorted or which we are not obliged to accept, we shall have to invoice you for any costs incurred.

Product and functional safety devices/applications or medical devices/applications

Our components are not developed, constructed or tested for the application as safety relevant component or for the application in medical devices.
Our products are not qualified at module and system level for such application.

In case buyer – or customer supplied by buyer – considers using our components in product safety devices/ applications or medical devices/applications, buyer and/or customer has to inform our local sales partner immediately and we and buyer and /or customer will analyze and coordinate the customer-specific request between us and buyer and/or customer.

Glossary

1) **Brightness:** Brightness values are measured during a current pulse of typically 25 ms, with an internal reproducibility of ±8 % and an expanded uncertainty of ±11 % (acc. to GUM with a coverage factor of k = 3).

2) **Reverse Operation:** This product is intended to be operated applying a forward current within the specified range. Applying any continuous reverse bias or forward bias below the voltage range of light emission shall be avoided because it may cause migration which can change the electro-optical characteristics or damage the LED.

3) **Chromaticity coordinate groups:** Chromaticity coordinates are measured during a current pulse of typically 25 ms, with an internal reproducibility of ±0.001 and an expanded uncertainty of ±0.004 (acc. to GUM with a coverage factor of k = 3).

4) **Forward Voltage:** The forward voltage is measured during a current pulse of typically 8 ms, with an internal reproducibility of ±0.05 V and an expanded uncertainty of ±0.1 V (acc. to GUM with a coverage factor of k = 3).

5) **Thermal Resistance:** Rth max is based on statistic values (6σ).

6) **Typical Values:** Due to the special conditions of the manufacturing processes of semiconductor devices, the typical data or calculated correlations of technical parameters can only reflect statistical figures. These do not necessarily correspond to the actual parameters of each single product, which could differ from the typical data and calculated correlations or the typical characteristic line. If requested, e.g. because of technical improvements, these typ. data will be changed without any further notice.

7) **Characteristic curve:** In the range where the line of the graph is broken, you must expect higher differences between single devices within one packing unit.

8) **Tolerance of Measure:** Unless otherwise noted in drawing, tolerances are specified with ±0.1 and dimensions are specified in mm.

9) **Tape and Reel:** All dimensions and tolerances are specified acc. IEC 60286-3 and specified in mm.

Revision History

Version	Date	Change
1.5	2021-02-18	Features Schematic Transportation Box Dimensions of Transportation Box Glossary
1.6	2021-05-11	Chromaticity Coordinate Groups
1.7	2022-02-22	Further Information New Layout
1.8	2023-03-07	Reel Dimensions

EU RoHS and China RoHS compliant product
此产品符合欧盟 RoHS 指令的要求；
按照中国的相关法规和标准，
不含有毒有害物质或元素。

Published by ams-OSRAM AG
Tobelbader Strasse 30, 8141 Premstaetten, Austria
Phone +43 3136 500-0
ams-osram.com
© All rights reserved